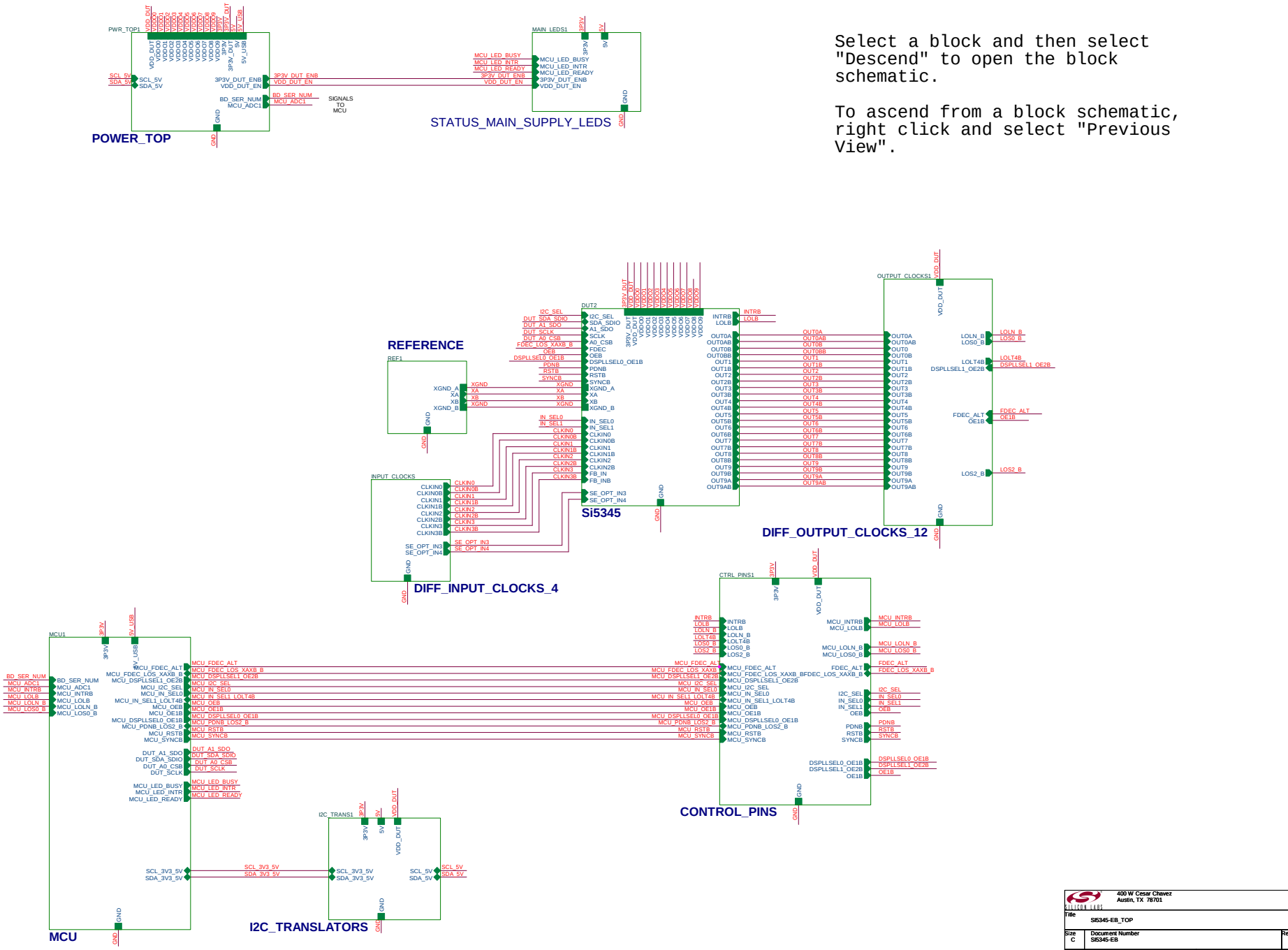

Select a block and then select "Descend" to open the block schematic.

To ascend from a block schematic, right click and select "Previous View".

400 W Cesar Chavez Austin, TX 78701		
Title: SI5345-EB_TOP		
Size: C	Document Number: SI5345-EB	Rev: 1.1
Date: Monday, July 28, 2014	Sheet 1 of 44	

REVISION CONTROL

Rev 1.1 - July 1, 2014, Initial Board Release

400 W Cesar Chavez
Austin, TX 78701

Title	SI5345-EB_TOP_REVISION	
Size B	Document Number SI5345-EB	Rev 1.1
Date: Tuesday, July 22, 2014	Sheet 2 of 44	

CONTROL PINS CONNECTIONS

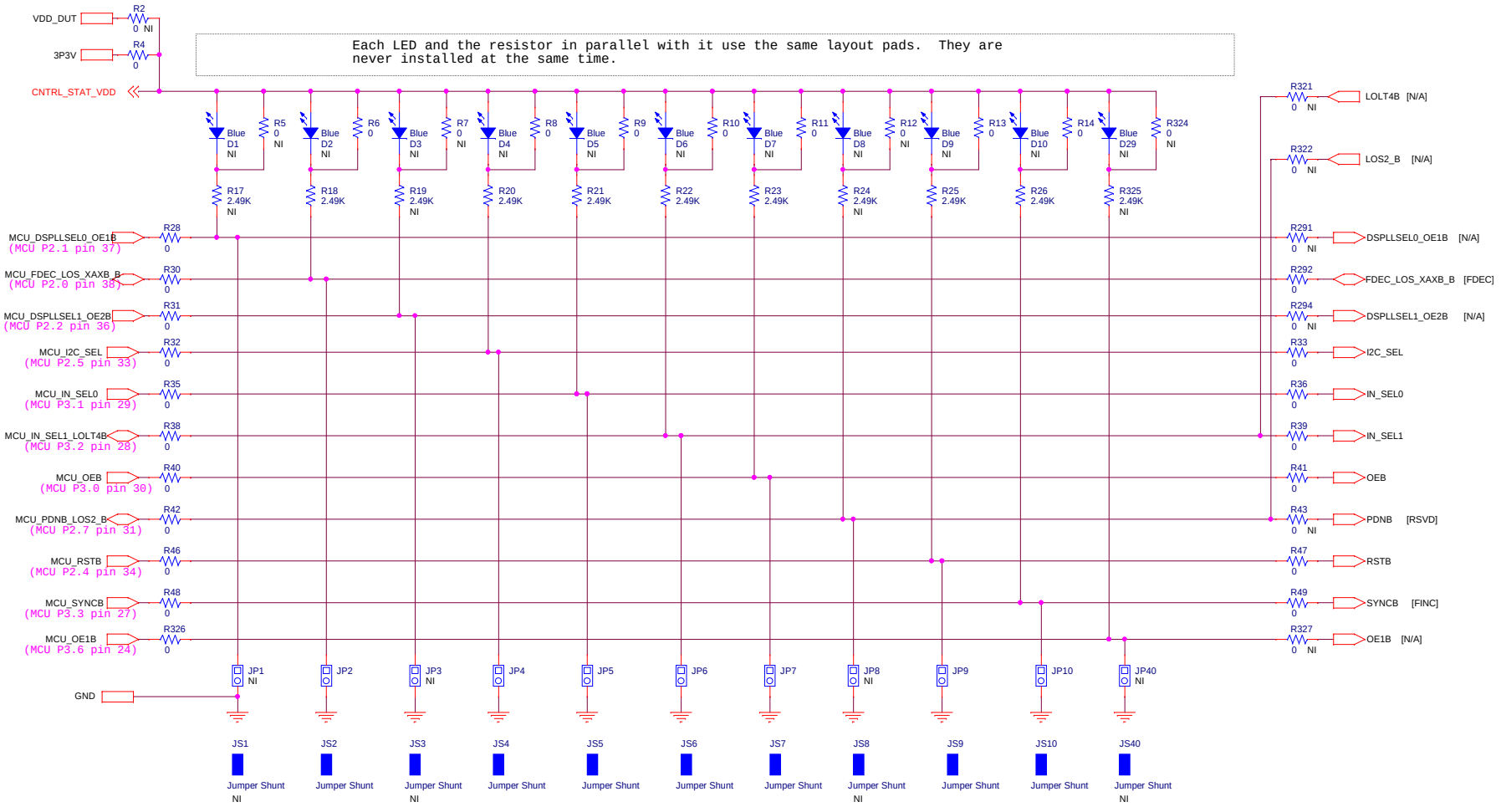

Note:
1. If the net name differs from the DUT pin name, the corresponding DUT pin name is enclosed in brackets. [DUT Pin Name]

2. "N/A" in brackets indicates that the function is not used for the DUT. [N/A]

SILICON LABS
400 W Cesar Chavez
Austin, TX 78701

Title	CONTROL PINS_P1	
Size B	Document Number SI5345-EB	Rev 1.1
Date: Wednesday, May 21, 2014	Sheet 3 of 44	

CONTROL PINS CONNECTIONS

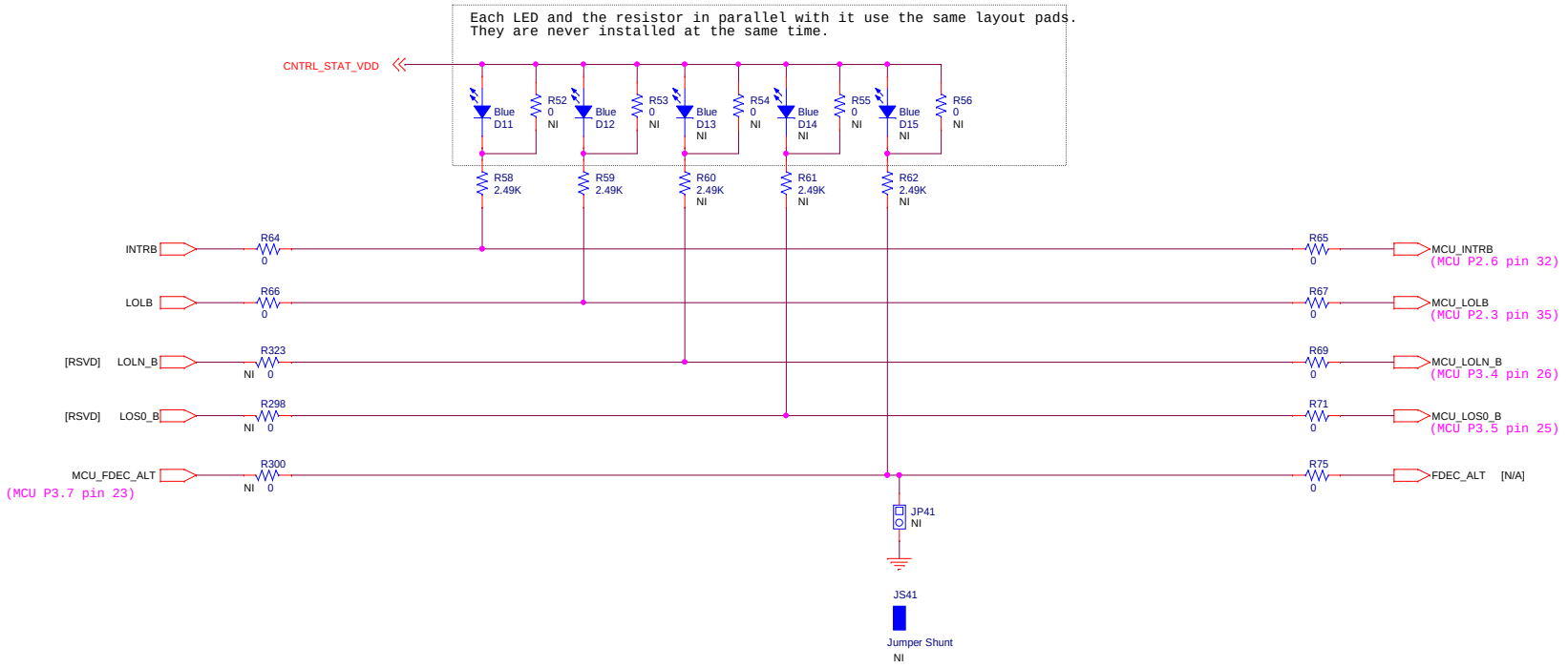

Note:
1. "N/A" in brackets indicates that the function is not used for the DUT. [N/A]

SILICON LABS
400 W Cesar Chavez
Austin, TX 78701

Title	CONTROL_PINS_P2	
Size B	Document Number SI5345-EB	Rev 1.1
Date: Wednesday, May 21, 2014	Sheet 4 of 44	

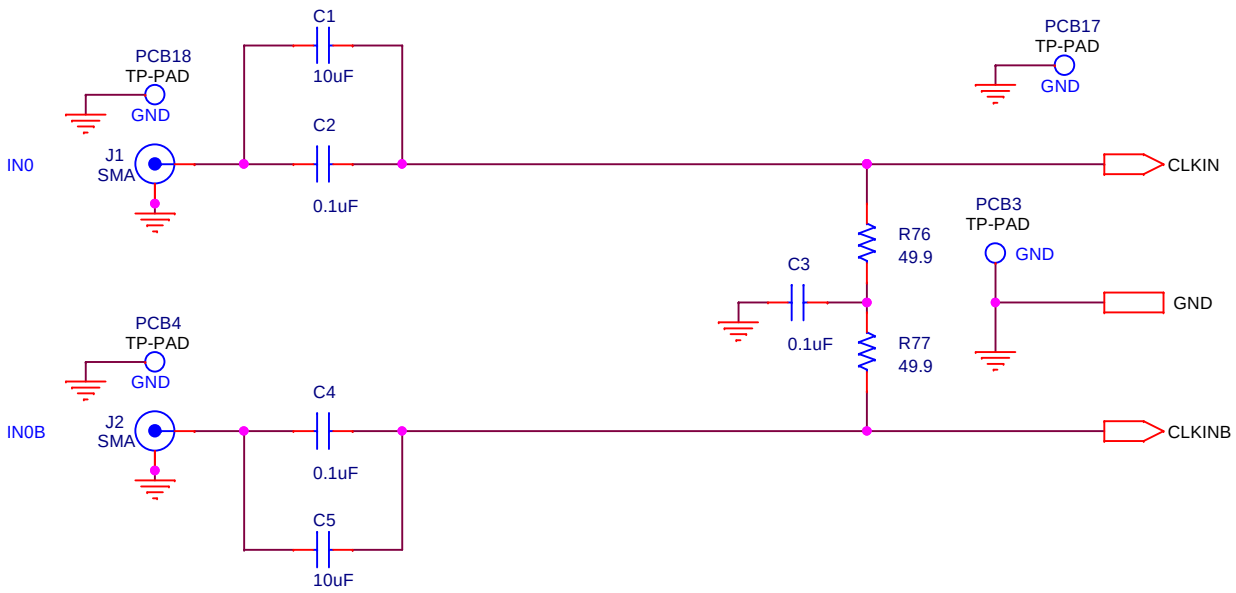

SILICON LABS

400 W Cesar Chavez
Austin, TX 78701

Title
DIFF_INPUT_CLK

Size	Document Number	Rev
A	SI5345-EB	1.1

Date: Tuesday, May 20, 2014 Sheet 5 of 44

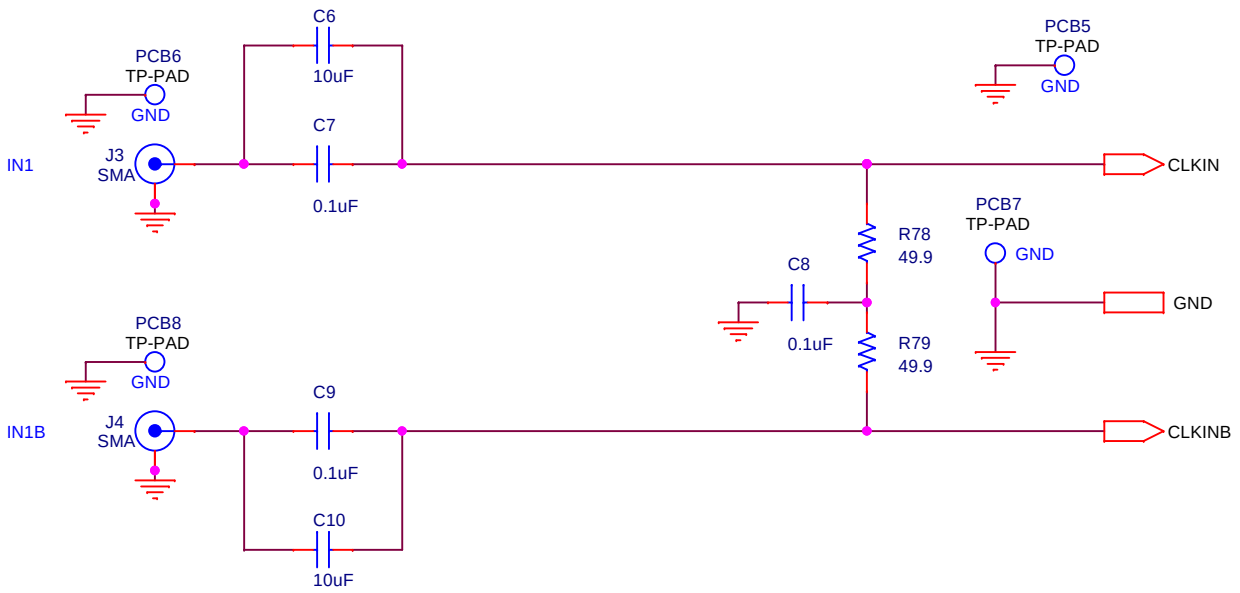

400 W Cesar Chavez
Austin, TX 78701

Title
DIFF_INPUT_CLK

Size	Document Number	Rev
A	SI5345-EB	1.1

Date: Tuesday, May 20, 2014 Sheet 6 of 44

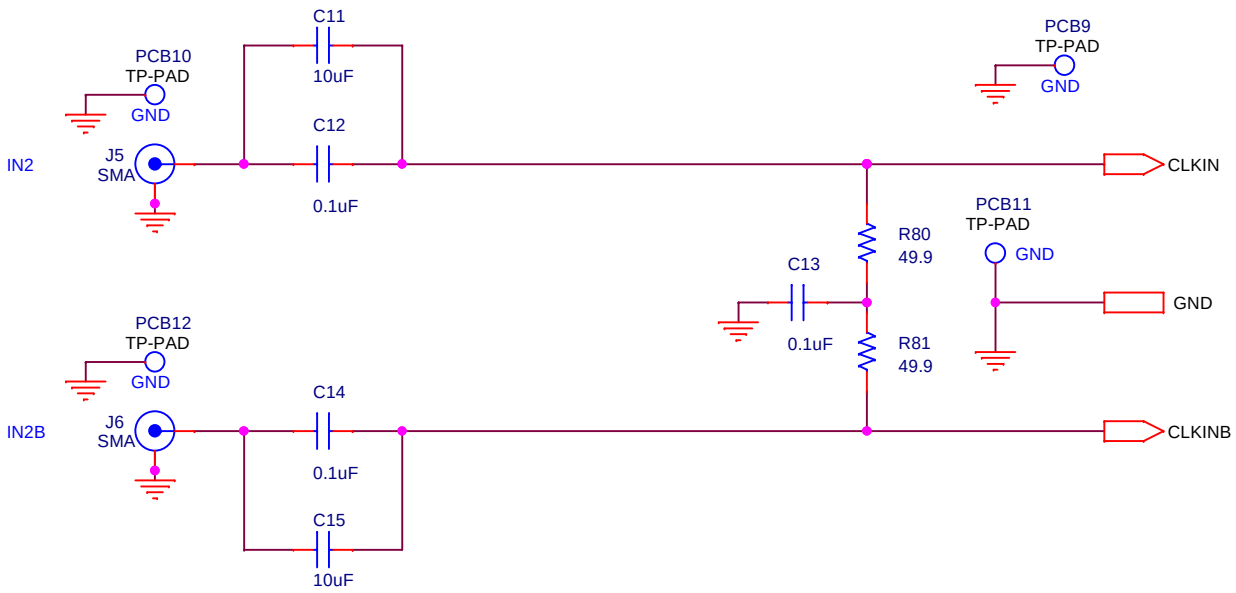

SILICON LABS

400 W Cesar Chavez
Austin, TX 78701

Title
DIFF_INPUT_CLK

Size	Document Number	Rev
A	SI5345-EB	1.1

Date: Tuesday, May 20, 2014 Sheet 7 of 44

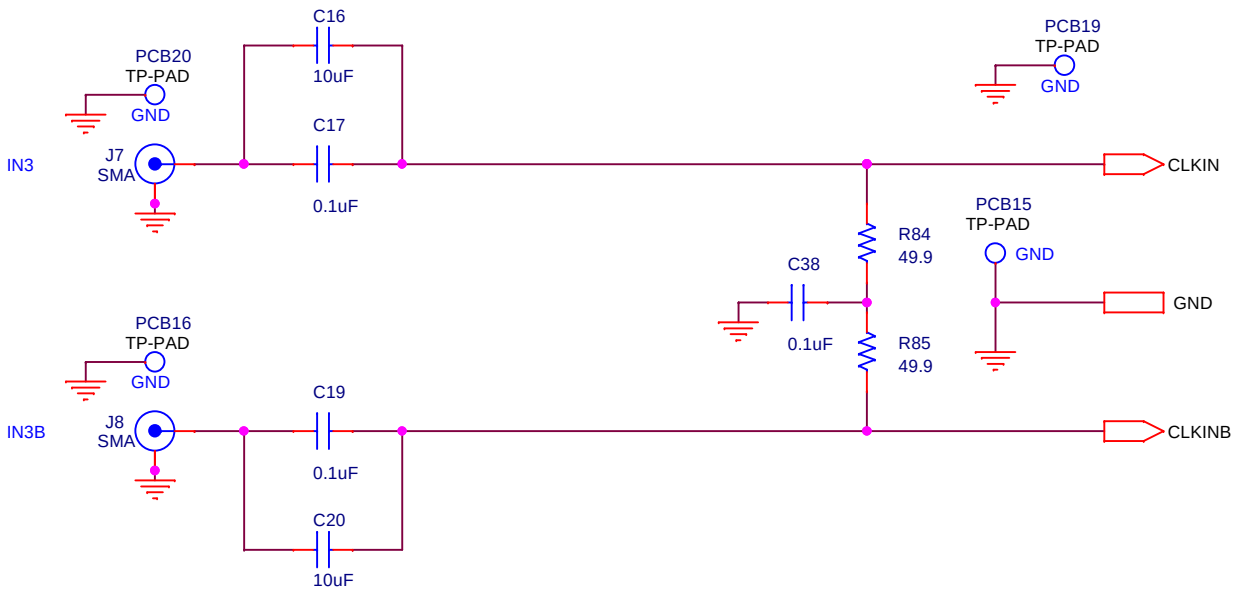

SILICON LABS

400 W Cesar Chavez
Austin, TX 78701

Title
DIFF_INPUT_CLK

Size	Document Number	Rev
A	SI5345-EB	1.1

Date: Tuesday, May 20, 2014 Sheet 8 of 44

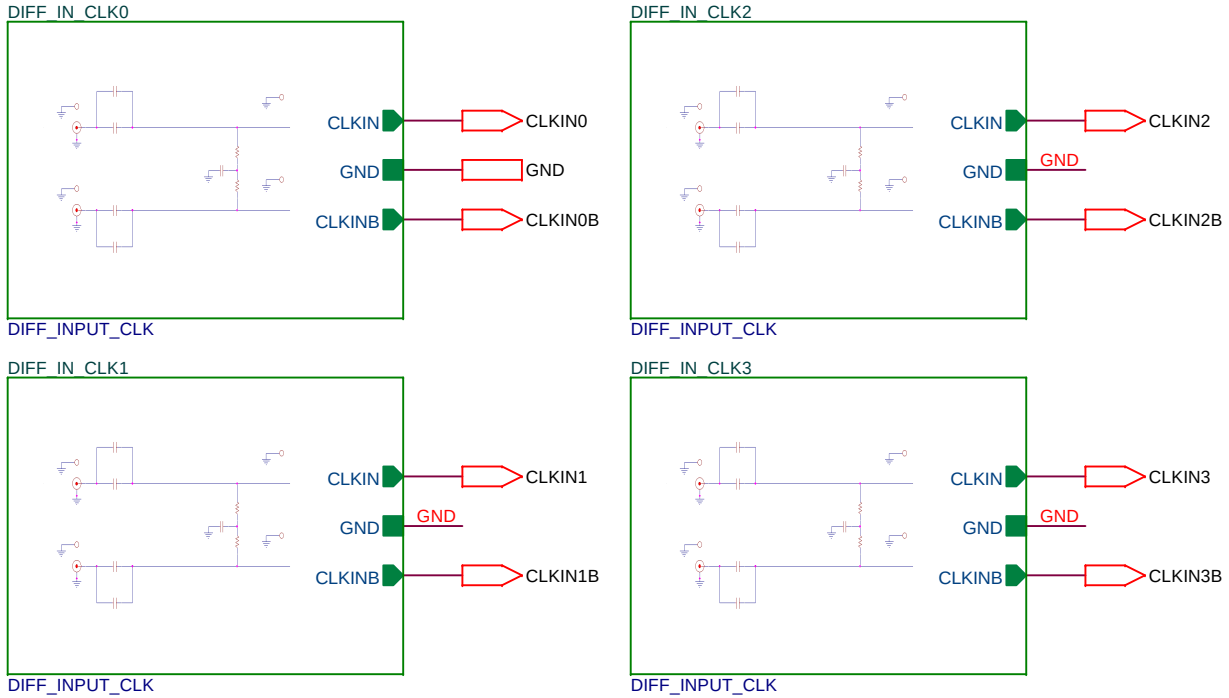

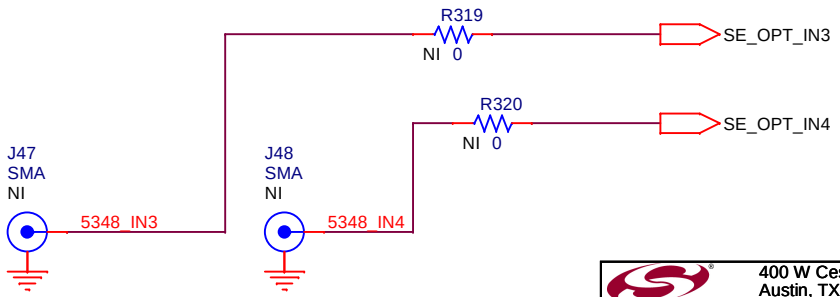

Single-ended clocks only.

SILICON LABS
400 W Cesar Chavez
Austin, TX 78701

Title
DIFF_INPUT_CLOCKS_4

Size	Document Number	Rev
A	SI5345-EB	1.1

Date: Tuesday, May 20, 2014 Sheet 9 of 44

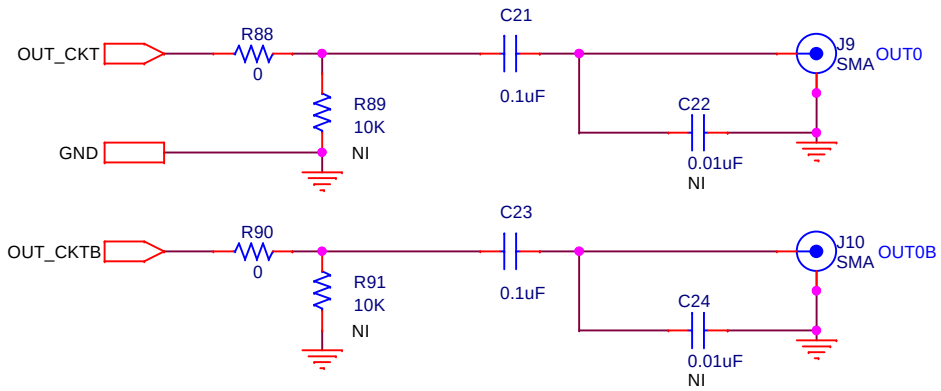

SILICON LABS
400 W Cesar Chavez
Austin, TX 78701

Title
DIFF_OUTPUT_CLK

Size	Document Number	Rev
A	SI5345-EB	1.1

Date: Tuesday, May 20, 2014 Sheet 10 of 44

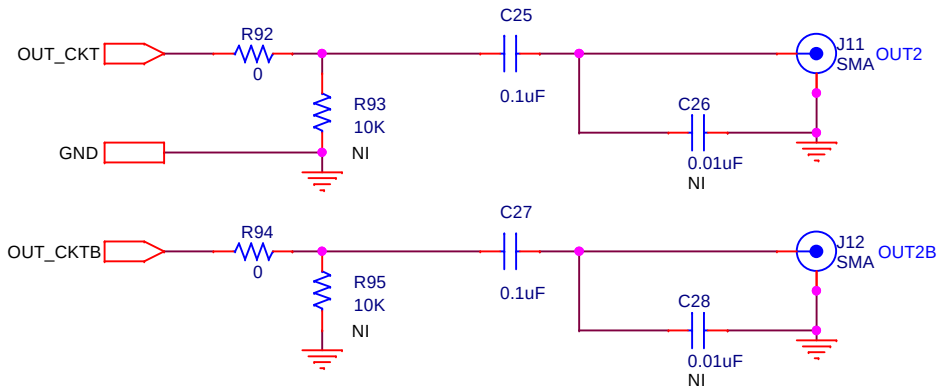

SILICON LABS
400 W Cesar Chavez
Austin, TX 78701

Title
DIFF_OUTPUT_CLK

Size	Document Number	Rev
A	SI5345-EB	1.1

Date: Tuesday, May 20, 2014 Sheet 11 of 44

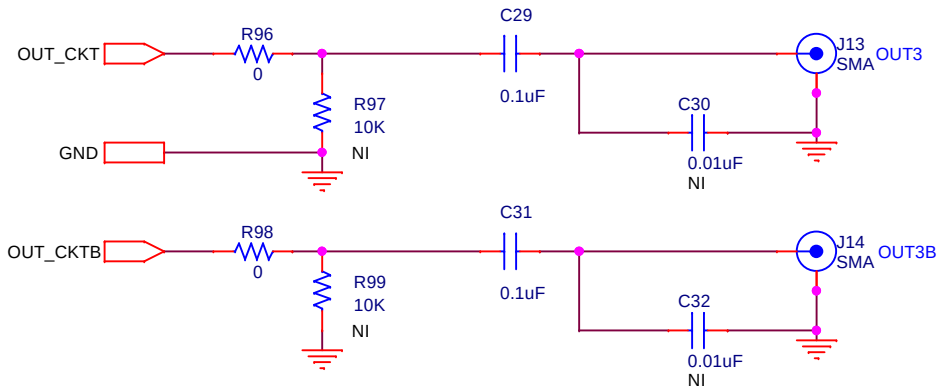

SILICON LABS
400 W Cesar Chavez
Austin, TX 78701

Title
DIFF_OUTPUT_CLK

Size	Document Number	Rev
A	SI5345-EB	1.1

Date: Tuesday, May 20, 2014 Sheet 12 of 44

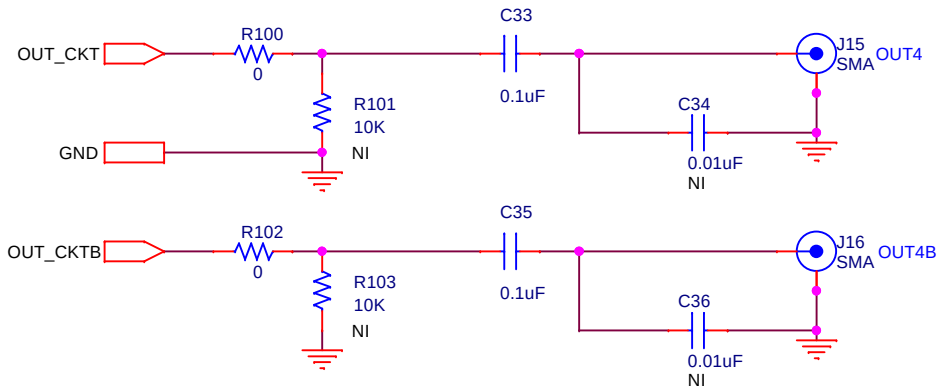

SILICON LABS
400 W Cesar Chavez
Austin, TX 78701

Title
DIFF_OUTPUT_CLK

Size	Document Number	Rev
A	SI5345-EB	1.1

Date: Tuesday, May 20, 2014 Sheet 13 of 44

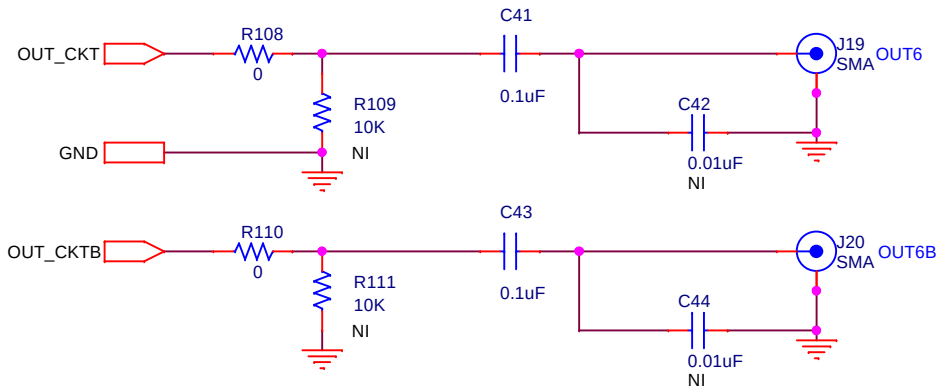

SILICON LABS
400 W Cesar Chavez
Austin, TX 78701

Title
DIFF_OUTPUT_CLK

Size	Document Number	Rev
A	SI5345-EB	1.1

Date: Tuesday, May 20, 2014 Sheet 14 of 44

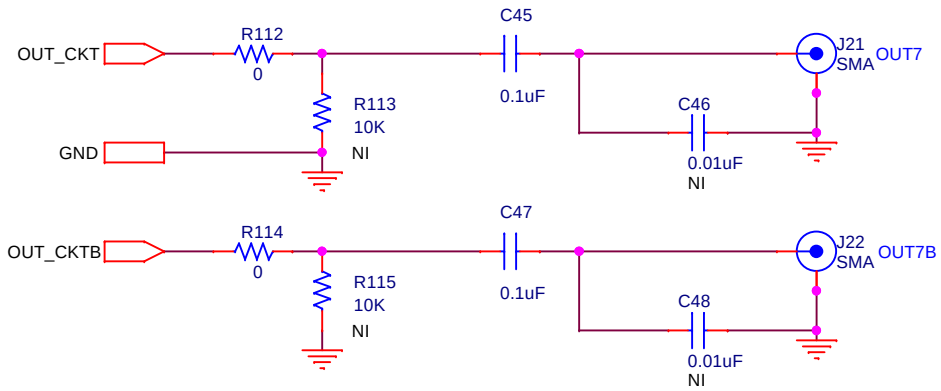

SILICON LABS
400 W Cesar Chavez
Austin, TX 78701

Title
DIFF_OUTPUT_CLK

Size	Document Number	Rev
A	SI5345-EB	1.1

Date: Tuesday, May 20, 2014 Sheet 15 of 44

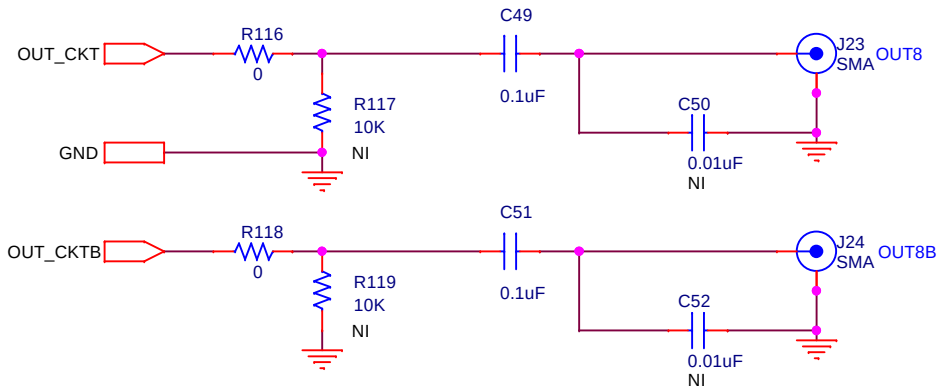

SILICON LABS
400 W Cesar Chavez
Austin, TX 78701

Title
DIFF_OUTPUT_CLK

Size	Document Number	Rev
A	SI5345-EB	1.1

Date: Tuesday, May 20, 2014 Sheet 16 of 44

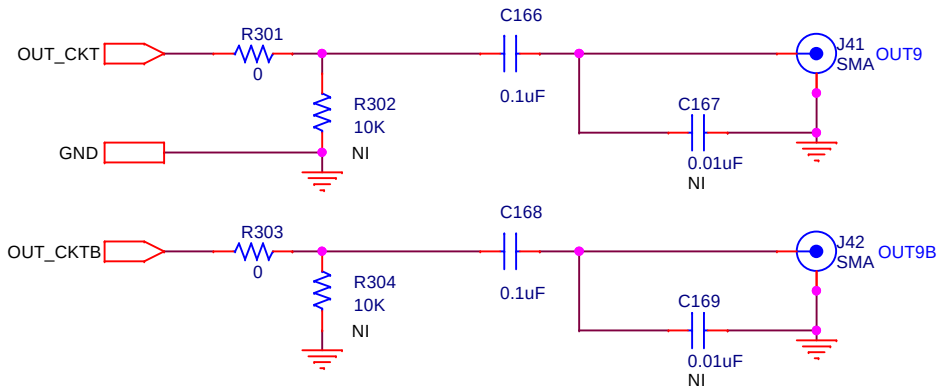

SILICON LABS
400 W Cesar Chavez
Austin, TX 78701

Title
DIFF_OUTPUT_CLK

Size	Document Number	Rev
A	SI5345-EB	1.1

Date: Tuesday, May 20, 2014 Sheet 17 of 44

DIFF_OUTPUT_CLK_DIG_IO

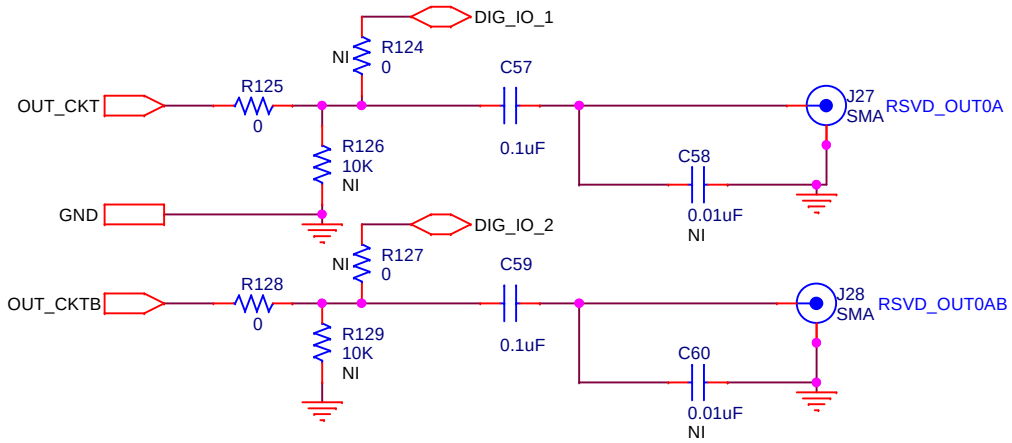

SILICON LABS
400 W Cesar Chavez
Austin, TX 78701

Title	DIFF_OUTPUT_CLK_DIG_IO	
Size A	Document Number SI5345-EB	Rev 1.1
Date: Tuesday, May 20, 2014	Sheet 18 of 44	

DIFF_OUTPUT_CLK_DIG_IO

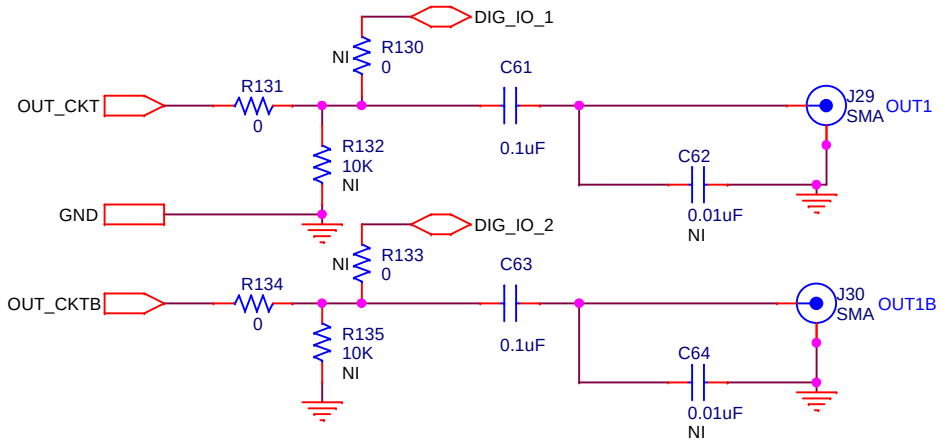

SILICON LABS
400 W Cesar Chavez
Austin, TX 78701

Title	DIFF_OUTPUT_CLK_DIG_IO	
Size A	Document Number SI5345-EB	Rev 1.1
Date: Tuesday, May 20, 2014	Sheet 19 of 44	

DIFF_OUTPUT_CLK_DIG_IO

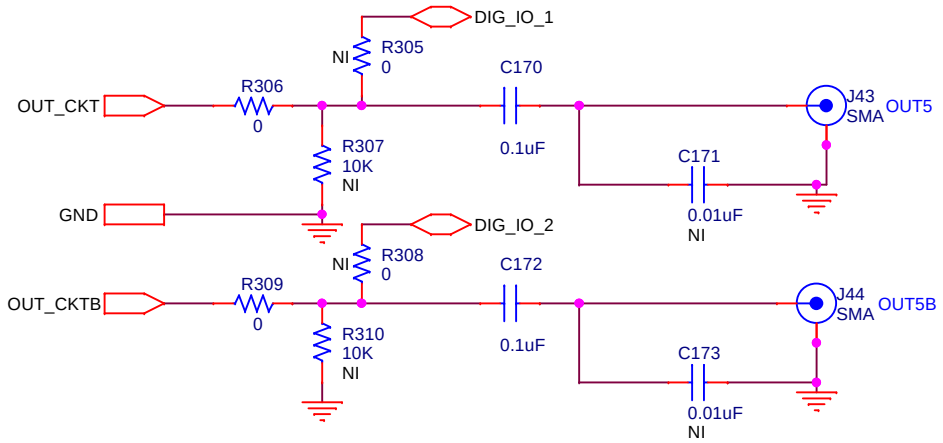

400 W Cesar Chavez
Austin, TX 78701

Title	DIFF_OUTPUT_CLK_DIG_IO	
Size A	Document Number SI5345-EB	Rev 1.1
Date: Tuesday, May 20, 2014	Sheet 20 of 44	

DIFF_OUTPUT_CLK_DIG_IO

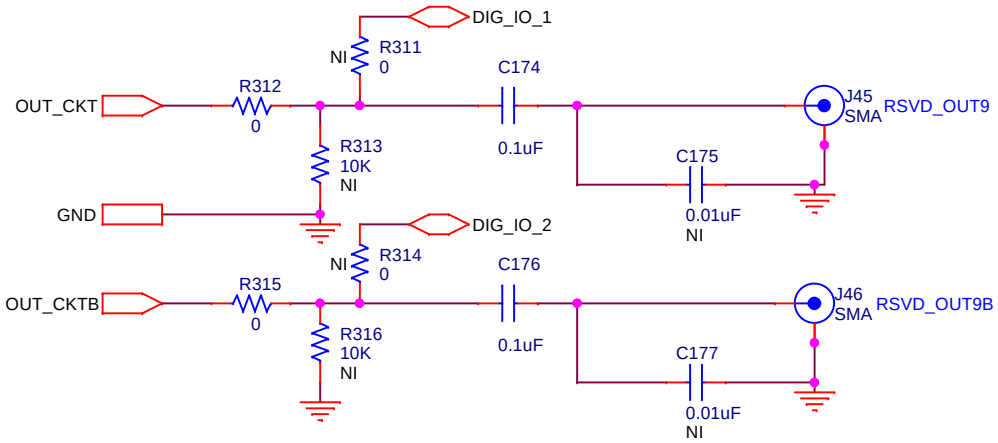

SILICON LABS
400 W Cesar Chavez
Austin, TX 78701

Title	DIFF_OUTPUT_CLK_DIG_IO	
Size A	Document Number SI5345-EB	Rev 1.1
Date: Tuesday, May 20, 2014	Sheet 21 of 44	

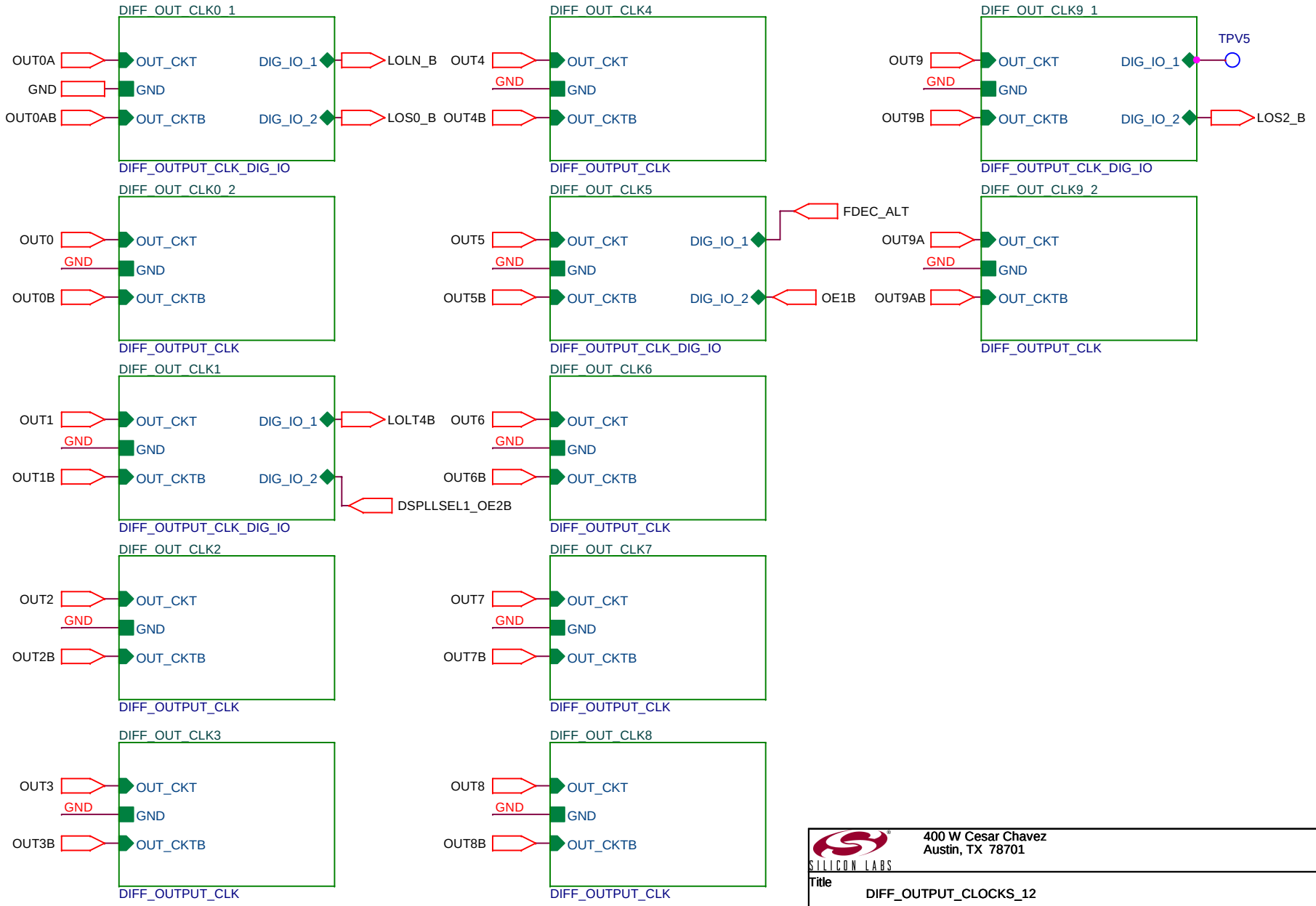

SILICON LABS

400 W Cesar Chavez
Austin, TX 78701

Title
DIFF_OUTPUT_CLOCKS_12

Size	Document Number	Rev
A	SI5345-EB	1.1

Date: Tuesday, May 20, 2014 Sheet 22 of 44

Fixed 3.3V 150 mA Voltage Regulator

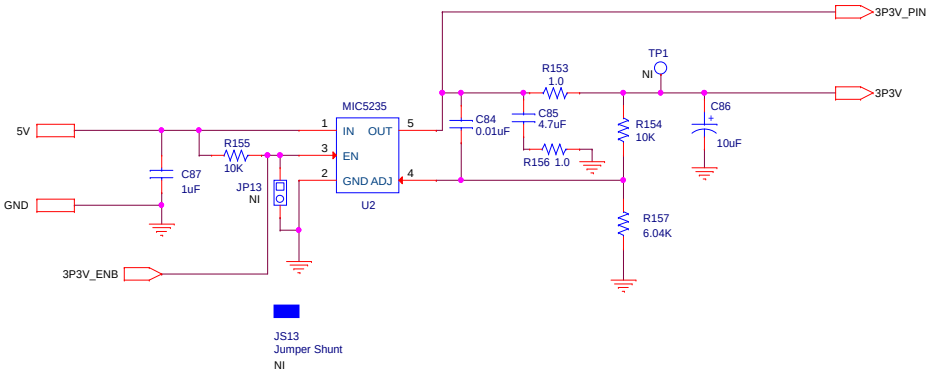

3P3V_DUT (In Schematic)

VDDA DUT (Board Silkscreen)

SILICON LABS	400 W Cesar Chavez Austin, TX 78701	
Title	VDD_REG_MIC5235	
Size B	Document Number SI5345-EB	Rev 1.1
Date: Tuesday, May 20, 2014	Sheet 23 of 44	

Fixed 3.3V 100 mA Voltage Regulator
(Enabled, no current measurement supported.)

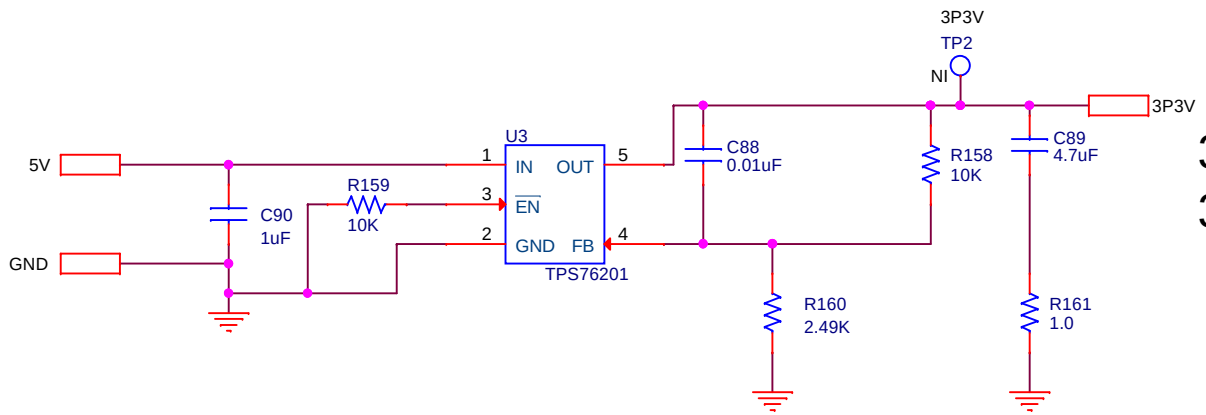

3P3V (In Schematic)
3P3V (Board Silkscreen)

SILICON LABS	400 W Cesar Chavez Austin, TX 78701	
Title	FIXED_3V3_REG_TPS76201_EN_NO_IM	
Size A	Document Number SI5345-EB <Variant Name>	Rev 1.1
Date: Tuesday, May 20, 2014	Sheet 24 of 44	

I2C LEVEL TRANSLATORS

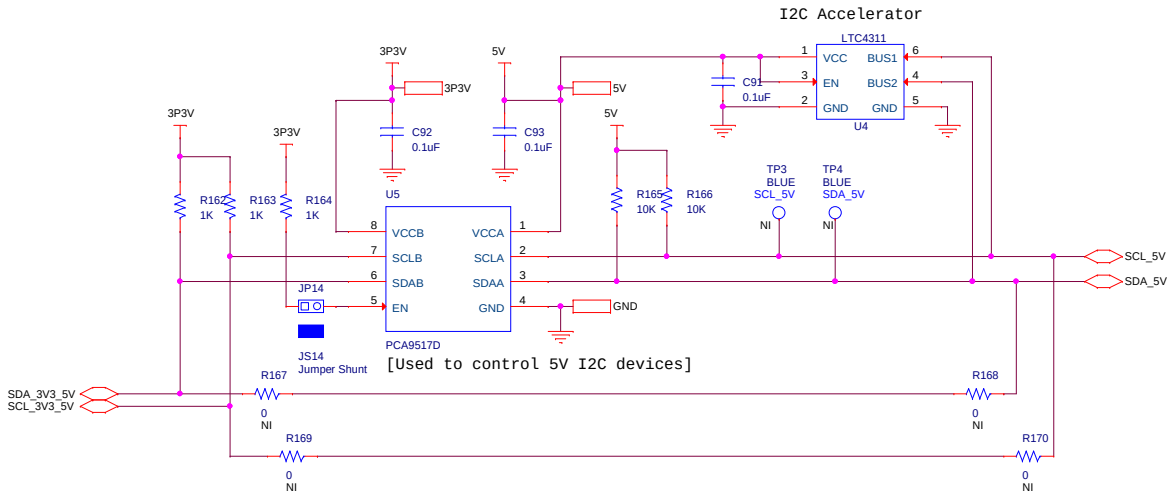

400 W Cesar Chavez
Austin, TX 78701

Title	I2C_TRANSLATORS	
Size B	Document Number SI5345-EB	Rev 1.1
Date: Tuesday, May 20, 2014	Sheet 25 of 44	

MAIN POWER INPUT SELECTS

EXTERNAL OR USB

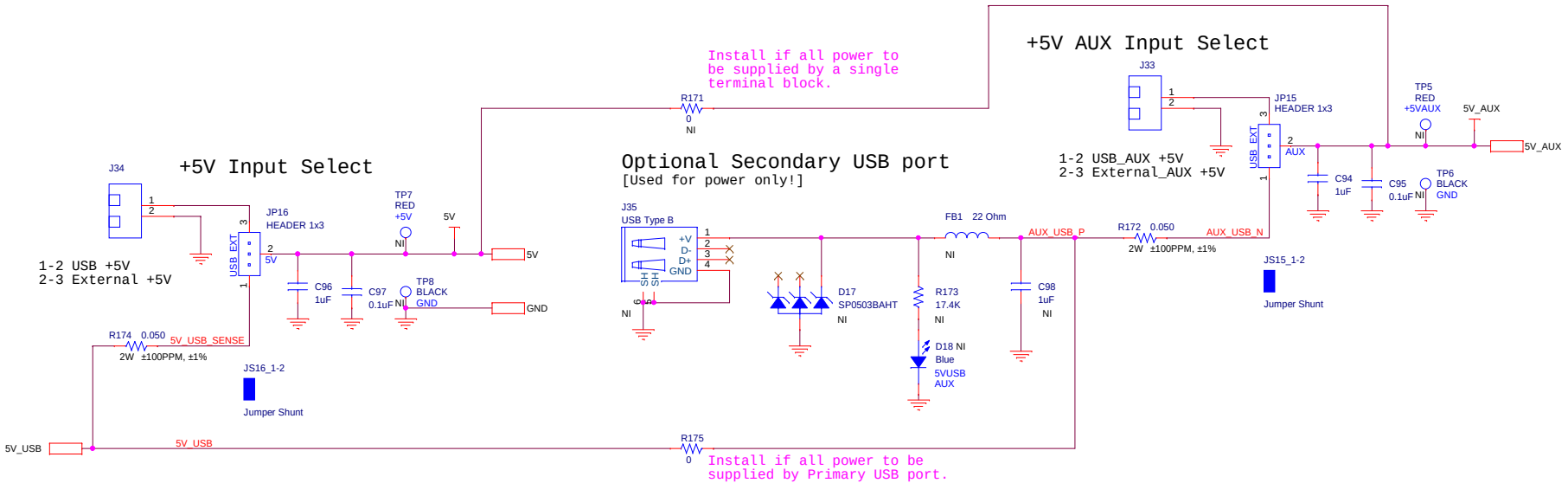

SILICON LABS	400 W Cesar Chavez Austin, TX 78701	
Title	MAIN_POWER_CONNECTIONS	
Size B	Document Number SI5345-EB	Rev 1.1
Date: Monday, June 09, 2014	Sheet 26 of 44	

8051 MCU

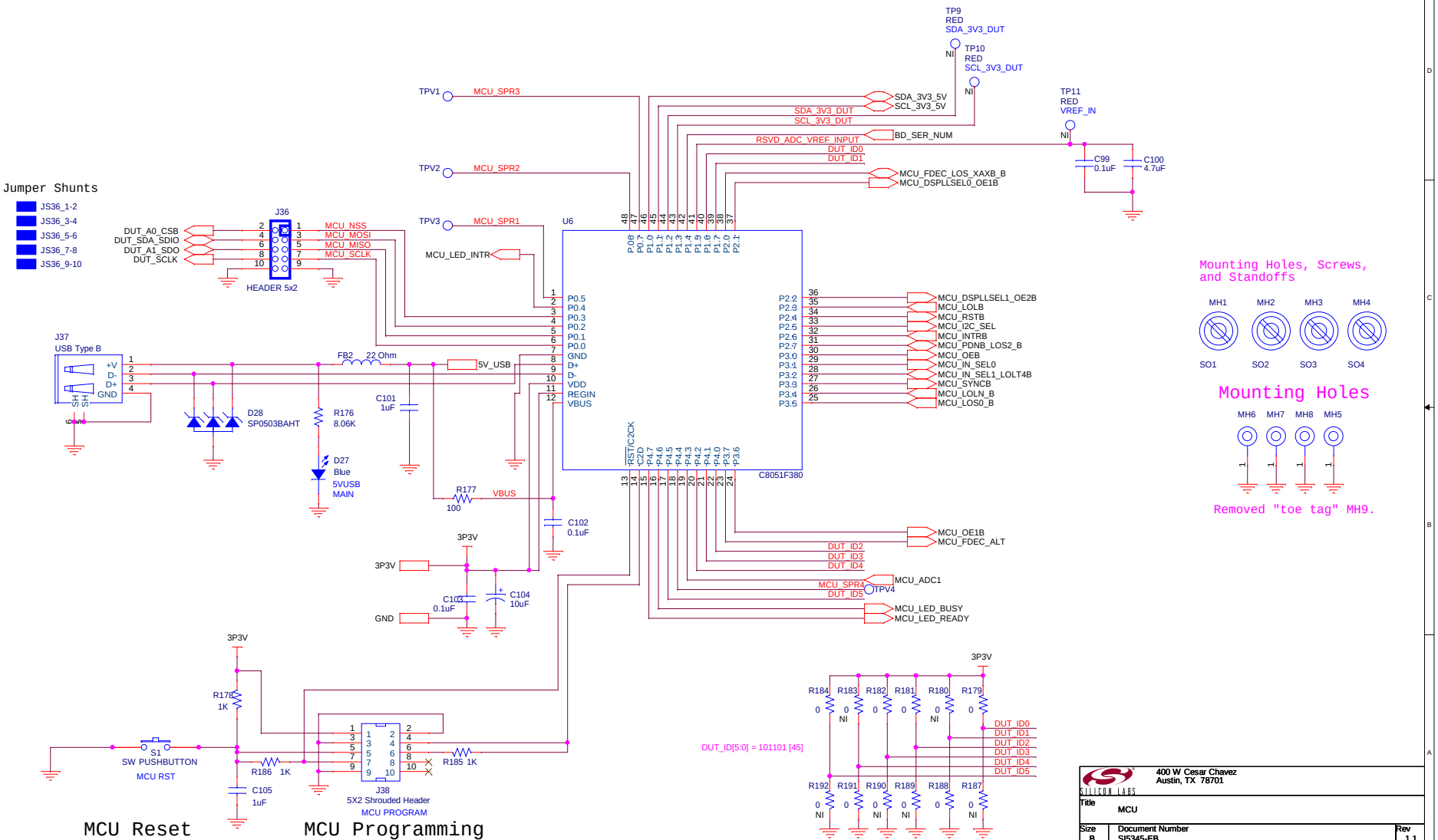

SILICON LABS	400 W Cesar Chavez Austin, TX 78701
Title	MCU
Size B	Document Number SI5345-EB
Rev	1.1
Date:	Monday, June 09, 2014
Sheet	27 of 44

PERIPHERALS

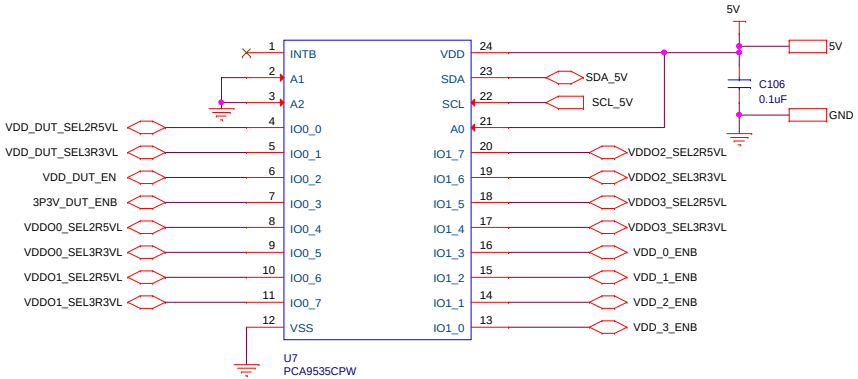

I2C VDD ENABLES/SELECTS FOR REGULATORS

I2C address: 0100001

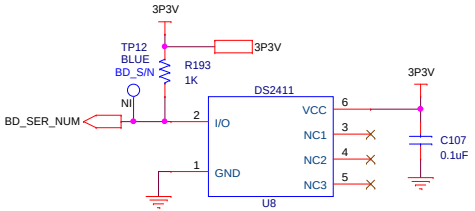

Board Serial Number

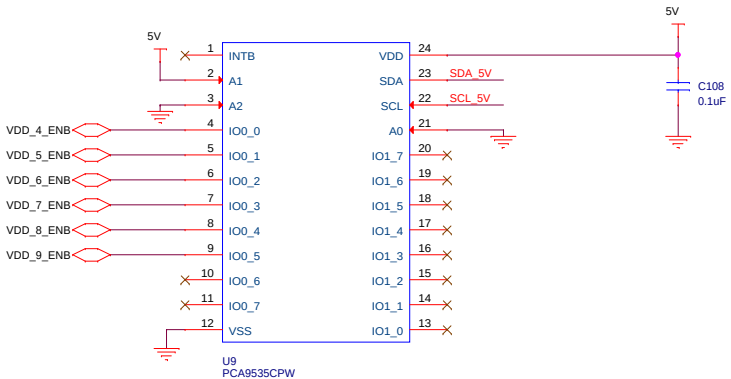

I2C VDD ENABLES/SELECTS FOR REGULATORS

I2C address: 0100010

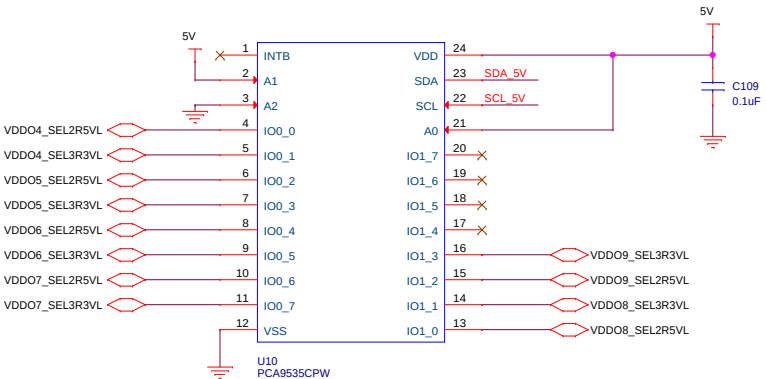

I2C VDD ENABLES/SELECTS FOR REGULATORS

I2C address: 0100011

SILICON LABS
400 W Cesar Chavez
Austin, TX 78701

Title	PERIPHERALS	
Size B	Document Number SI5345-EB	Rev 1.1
Date: Tuesday, May 20, 2014	Sheet 28 of 44	

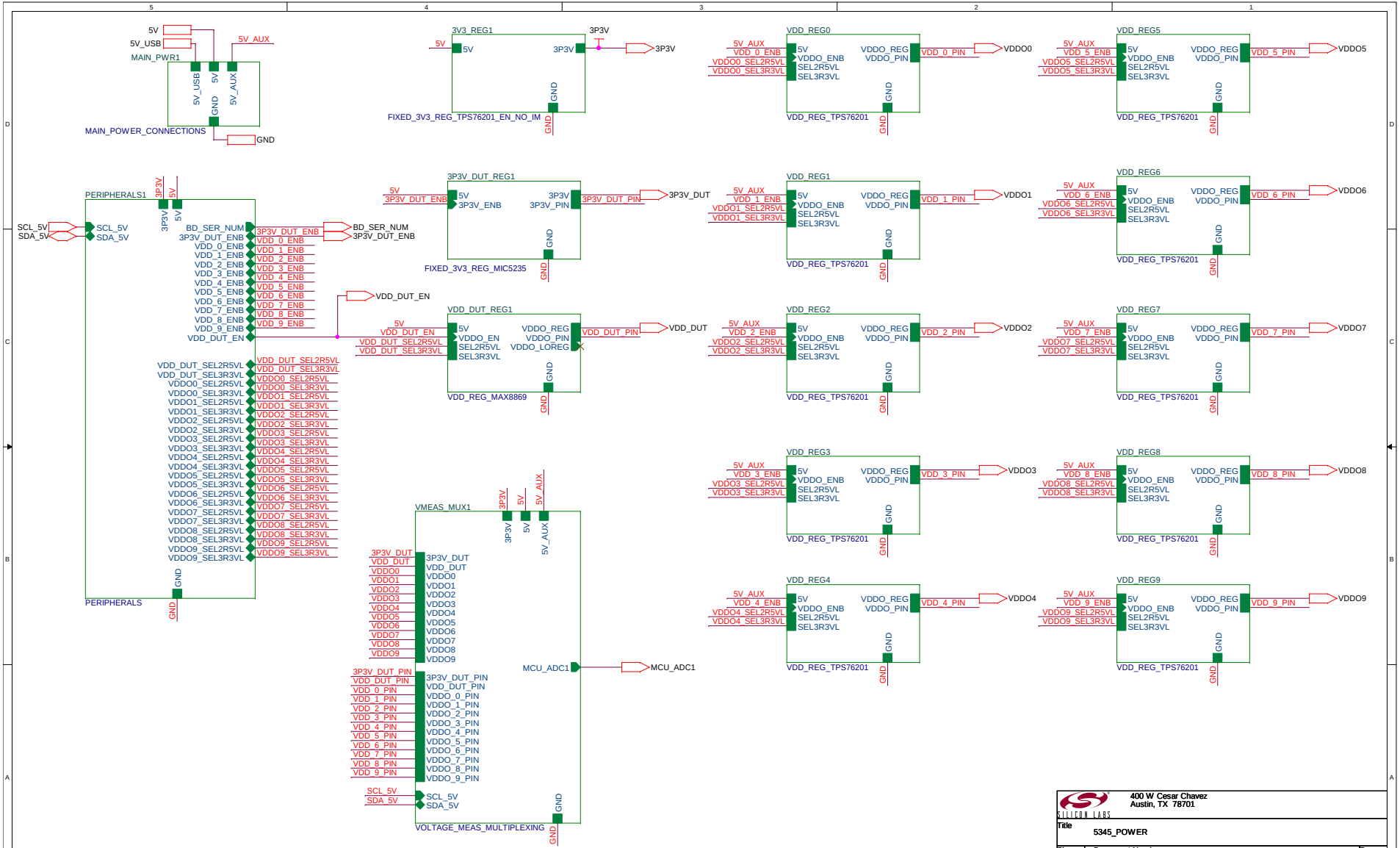

400 W Cesar Chavez
Austin, TX 78701
SILICON LABS

Title: 5345_POWER

Size	Document Number	Rev
B	SI5345-EB	1.1

Date: Tuesday, July 22, 2014 Sheet 29 of 44

REFERENCE INPUT CONNECTIONS

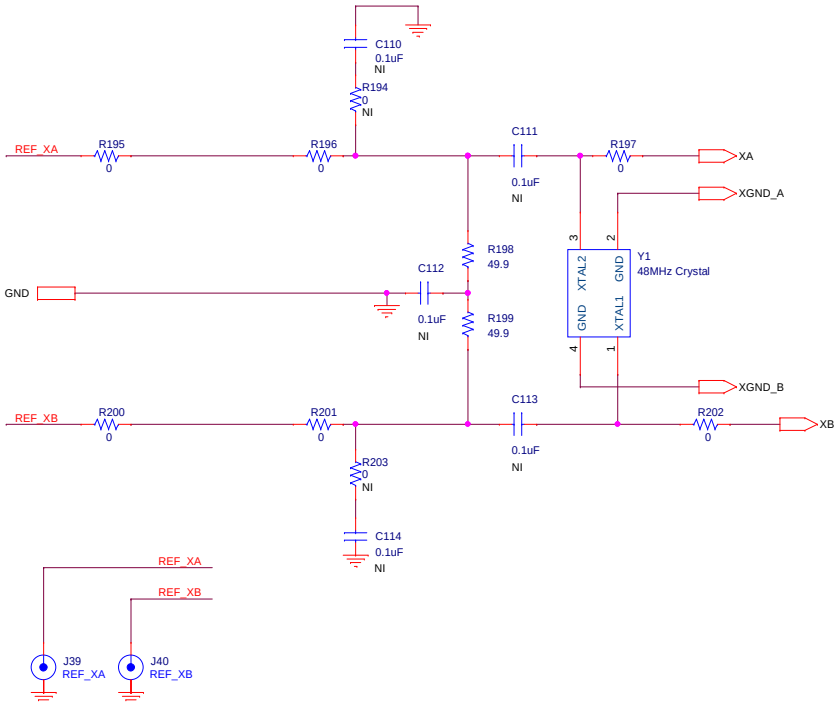

400 W Cesar Chavez
Austin, TX 78701

Title	REFERENCE	
Size B	Document Number SI5345-EB	Rev 1.1
Date: Tuesday, July 22, 2014	Sheet 30 of 44	

DUT CONNECTIONS

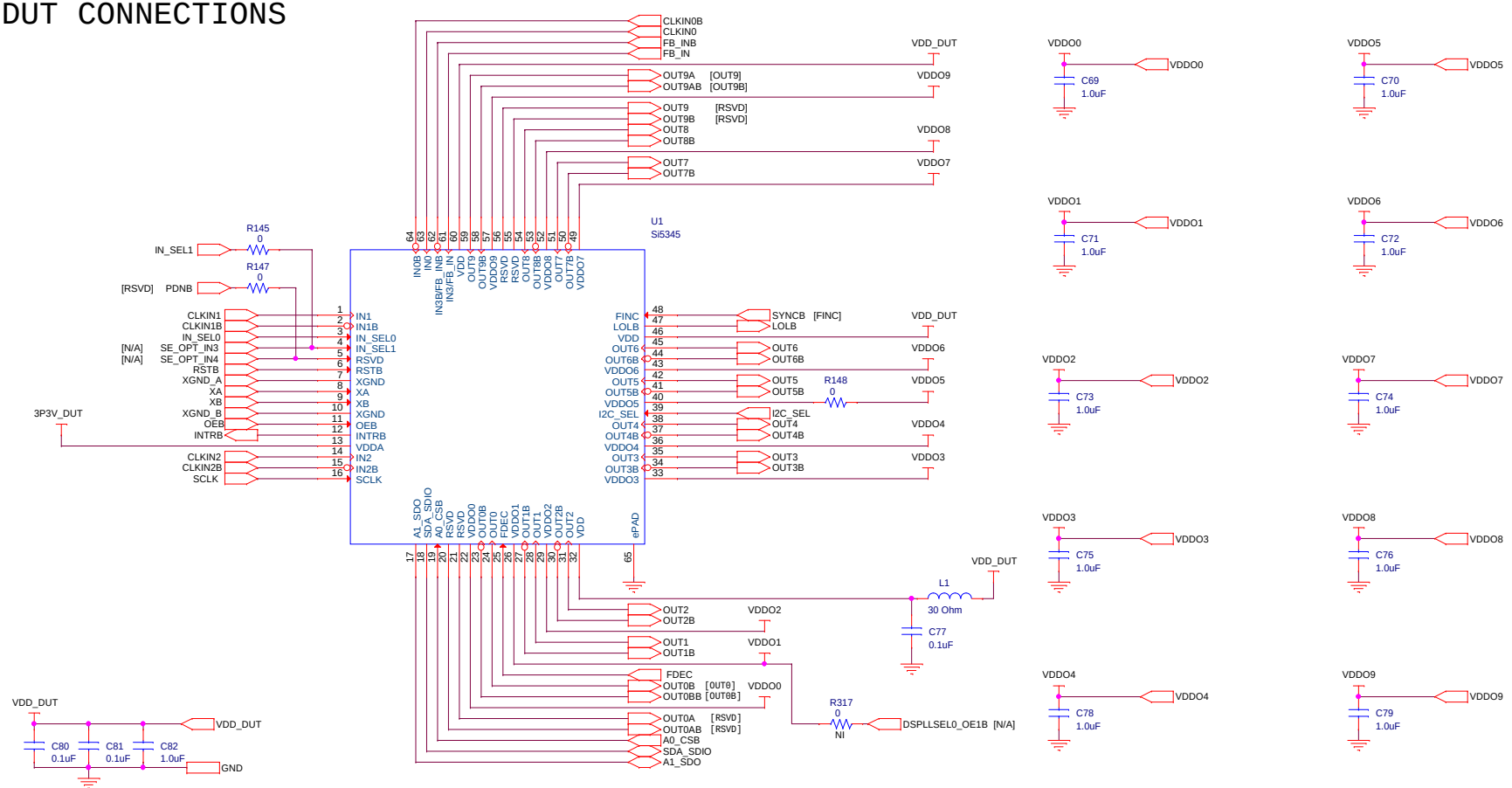

Note:
1. If the net name differs from the DUT pin name, the corresponding DUT pin name is enclosed in brackets. [DUT Pin Name]

2. "N/A" in brackets indicates that the function is not used for the DUT. [N/A]

SILICON LABS	400 W Cesar Chavez Austin, TX 78701	
Title	Si5345	
Size B	Document Number Si5345-EB	Rev 1.1
Date: Thursday, June 12, 2014	Sheet 31 of 44	

LEDS - SUPPLIES & STATUS

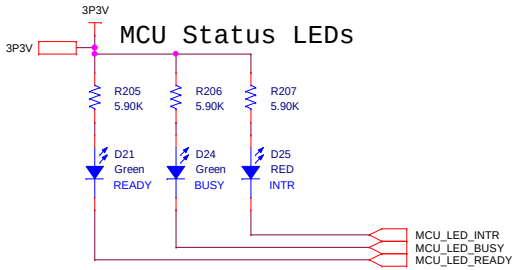

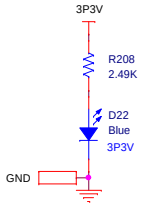

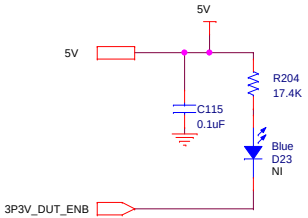

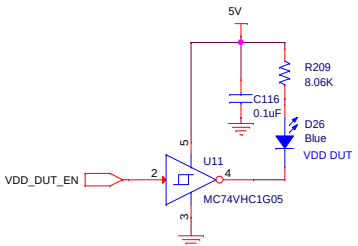

SILICON LABS

400 W Cesar Chavez
Austin, TX 78701

Title
STATUS_MAIN_SUPPLY_LEDS

Size	Document Number	Rev
B	SI5345-EB	1.1

Date: Tuesday, May 20, 2014 Sheet 32 of 44

100 mA Adjustable Voltage Regulator

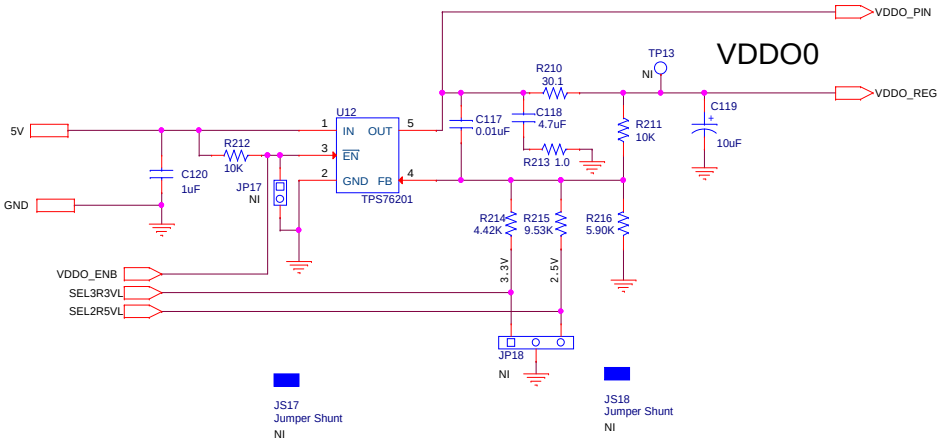

SILICON LABS	400 W Cesar Chavez Austin, TX 78701	
Title	VDD_REG_TPS76201	
Size B	Document Number SI5345-EB	Rev 1.1
Date: Tuesday, May 20, 2014	Sheet 33 of 44	

100 mA Adjustable Voltage Regulator

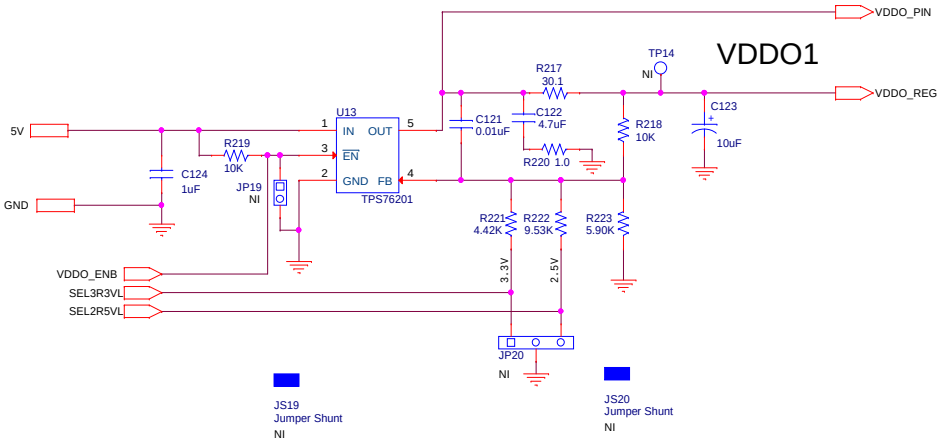

400 W Cesar Chavez
Austin, TX 78701

Title	VDD_REG_TPS76201	
Size B	Document Number SI5345-EB	Rev 1.1
Date: Tuesday, May 20, 2014	Sheet 34 of 44	

100 mA Adjustable Voltage Regulator

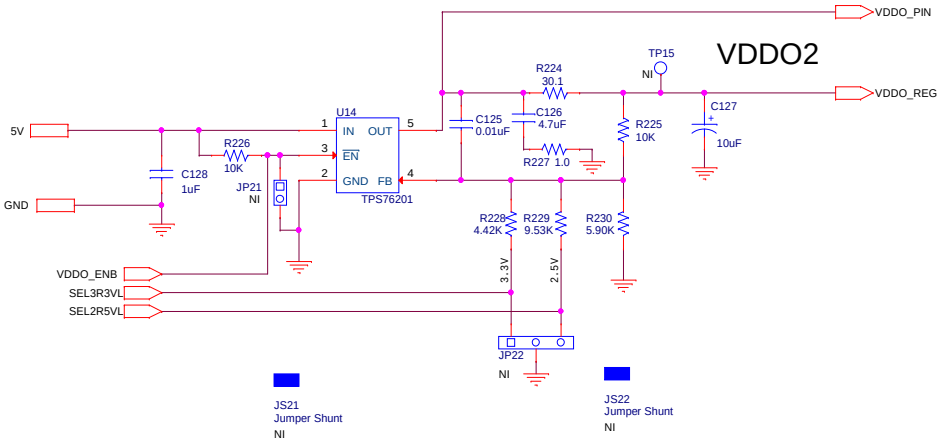

SILICON LABS
400 W Cesar Chavez
Austin, TX 78701

Title	VDD_REG_TPS76201	
Size B	Document Number SI5345-EB	Rev 1.1
Date: Tuesday, May 20, 2014	Sheet 35 of 44	

100 mA Adjustable Voltage Regulator

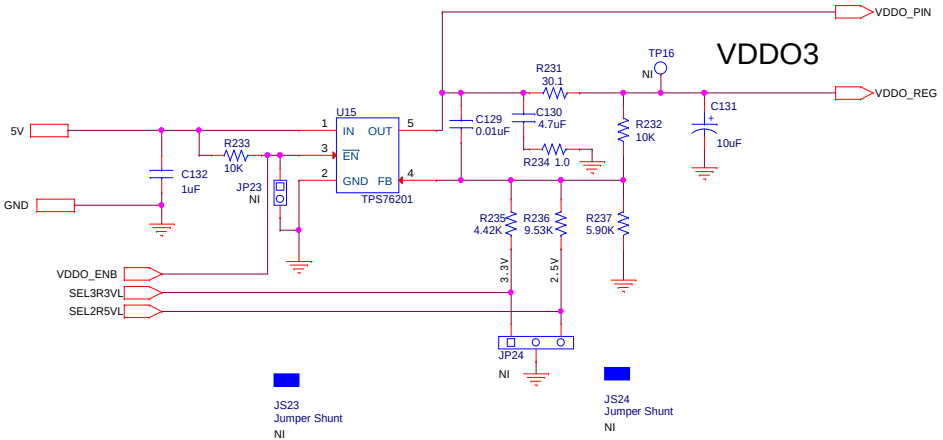

SILICON LABS	400 W Cesar Chavez Austin, TX 78701	
Title	VDD_REG_TPS76201	
Size B	Document Number SI5345-EB	Rev 1.1
Date: Tuesday, May 20, 2014	Sheet 36 of 44	

100 mA Adjustable Voltage Regulator

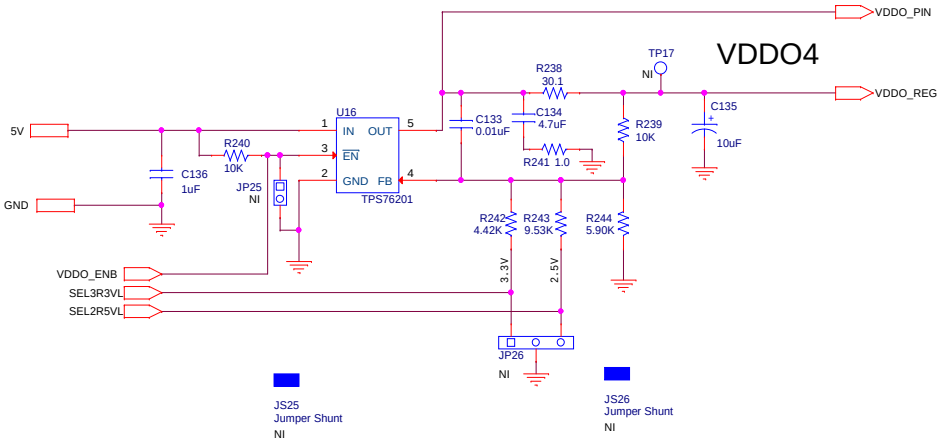

400 W Cesar Chavez
Austin, TX 78701

Title	VDD_REG_TPS76201	
Size B	Document Number SI5345-EB	Rev 1.1
Date: Tuesday, May 20, 2014	Sheet 37 of 44	

100 mA Adjustable Voltage Regulator

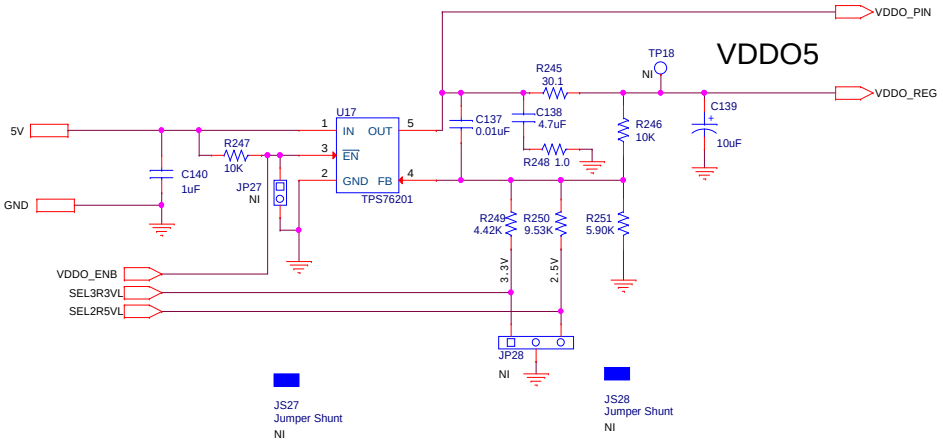

SILICON LABS
400 W Cesar Chavez
Austin, TX 78701

Title	VDD_REG_TPS76201	
Size B	Document Number SI5345-EB	Rev 1.1
Date: Tuesday, May 20, 2014	Sheet 38 of 44	

100 mA Adjustable Voltage Regulator

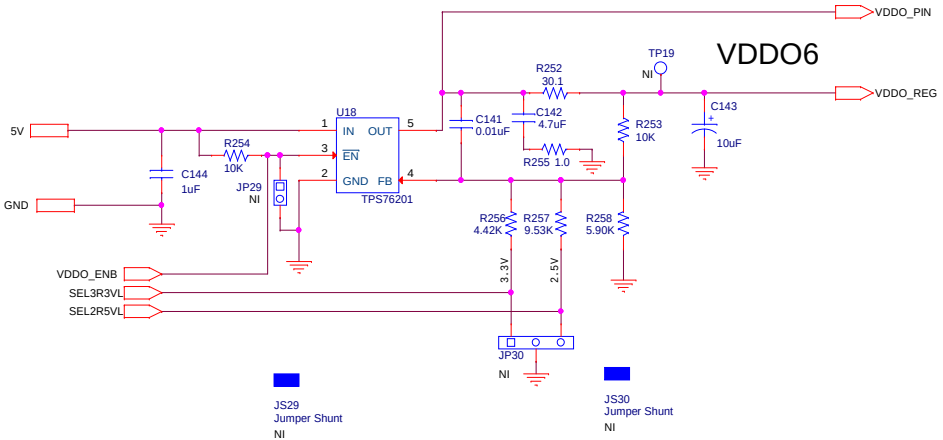

SILICON LABS	400 W Cesar Chavez Austin, TX 78701	
Title	VDD_REG_TPS76201	
Size B	Document Number SI5345-EB	Rev 1.1
Date: Tuesday, May 20, 2014	Sheet 39 of 44	

100 mA Adjustable Voltage Regulator

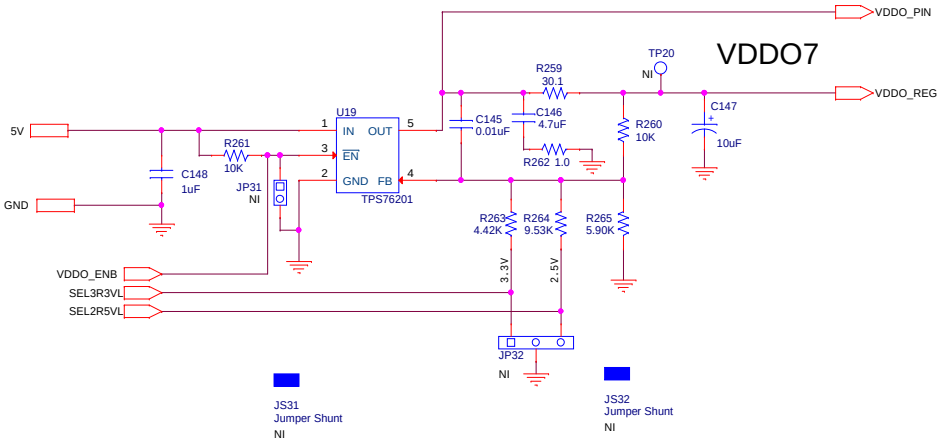

400 W Cesar Chavez
Austin, TX 78701

Title	VDD_REG_TPS76201	
Size B	Document Number SI5345-EB	Rev 1.1
Date: Tuesday, May 20, 2014	Sheet 40 of 44	

100 mA Adjustable Voltage Regulator

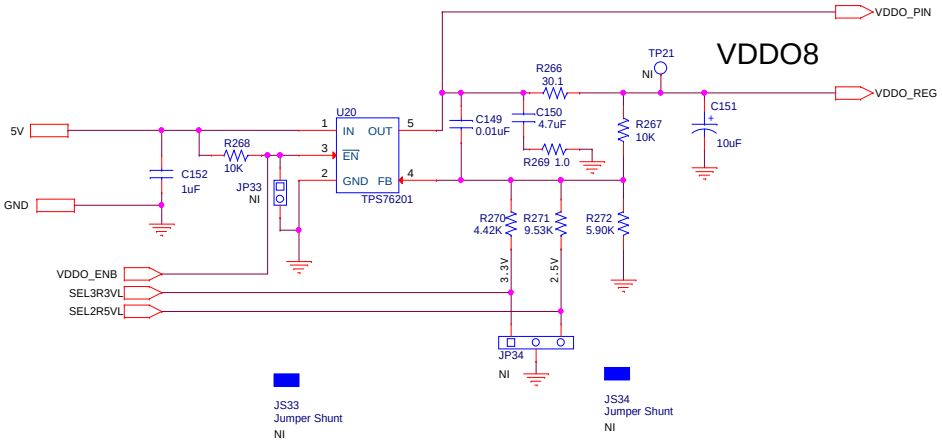

SILICON LABS	400 W Cesar Chavez Austin, TX 78701	
Title	VDD_REG_TPS76201	
Size B	Document Number SI5345-EB	Rev 1.1
Date: Tuesday, May 20, 2014	Sheet 41 of 44	

100 mA Adjustable Voltage Regulator

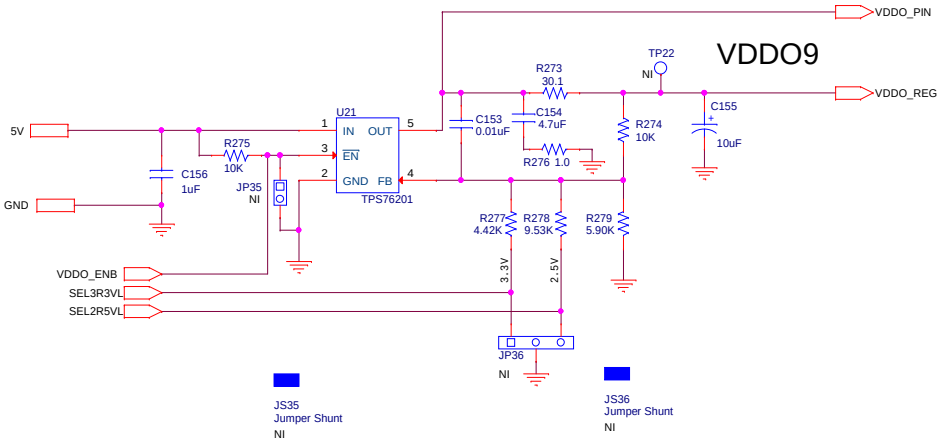

SILICON LABS	400 W Cesar Chavez Austin, TX 78701	
Title	VDD_REG_TPS76201	
Size B	Document Number SI5345-EB	Rev 1.1
Date: Tuesday, May 20, 2014	Sheet 42 of 44	

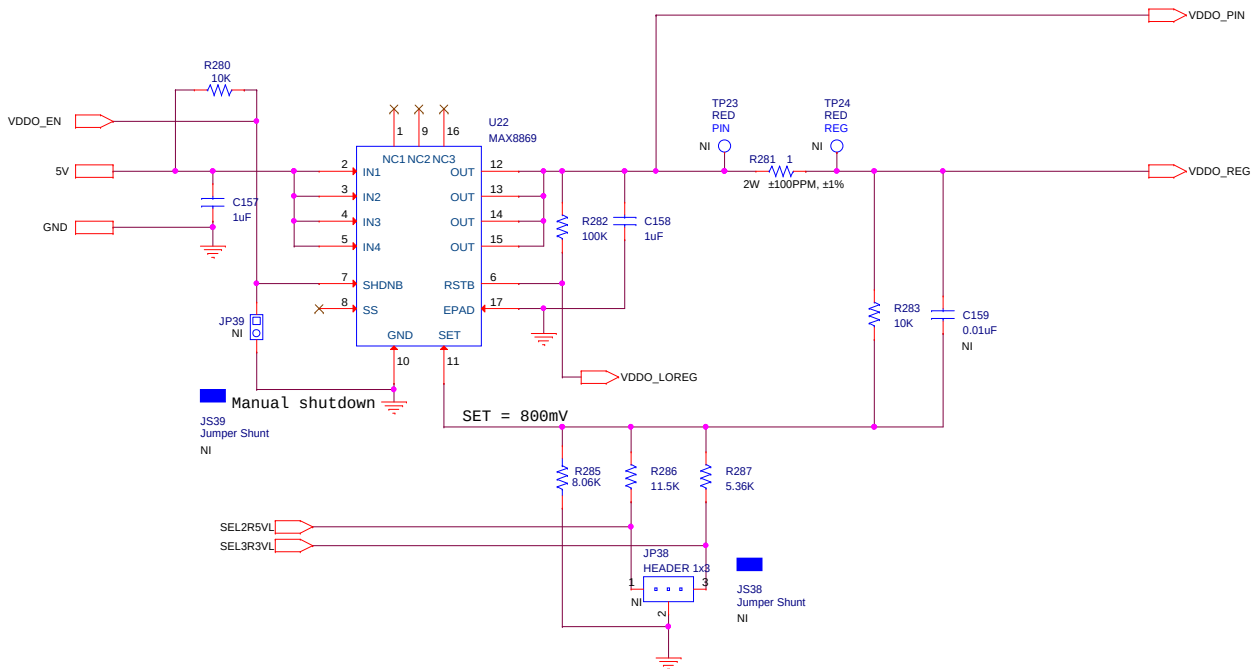

SILICON LABS	400 W Cesar Chavez Austin, TX 78701	
Title	VDD_REG_MAX8869	
Size B	Document Number SI5345-EB	Rev 1.1
Date: Tuesday, July 22, 2014	Sheet 43 of 44	

VOLTAGE MEASUREMENT MULTIPLEXING

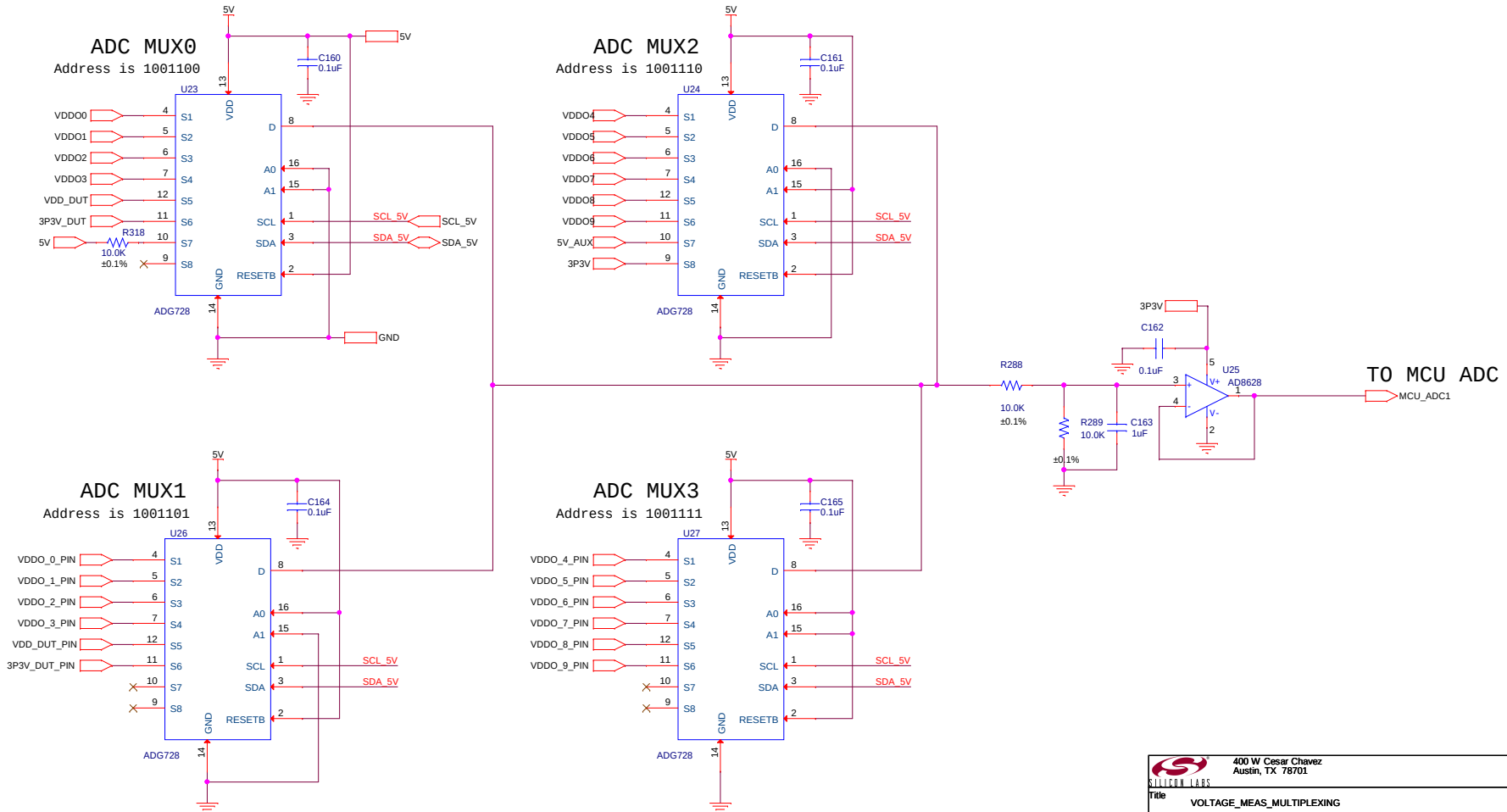

SILICON LABS	400 W Cesar Chavez Austin, TX 78701	
Title	VOLTAGE_MEAS_MULTIPLEXING	
Size B	Document Number SI5345-EB	Rev 1.1
Date: Tuesday, May 20, 2014	Sheet 44 of 44	