EFM32

... the world's most energy friendly microcontrollers

EFM32 G290 MCU Board

The EFM32 G290 MCU Board is a small plugin module for usage with the EFM32 Gecko Development Kit.

Features:

- The worlds most energy friendly microcontroller
- Compatible with the Advanced Energy Monitoring (AEM) system of the EFM32 Gecko Development Kit
- Leds indicating power and reset
- 32 MHz crystal
- 32.768 kHz crystal
- Reset button and ground-hooks for easy debugging

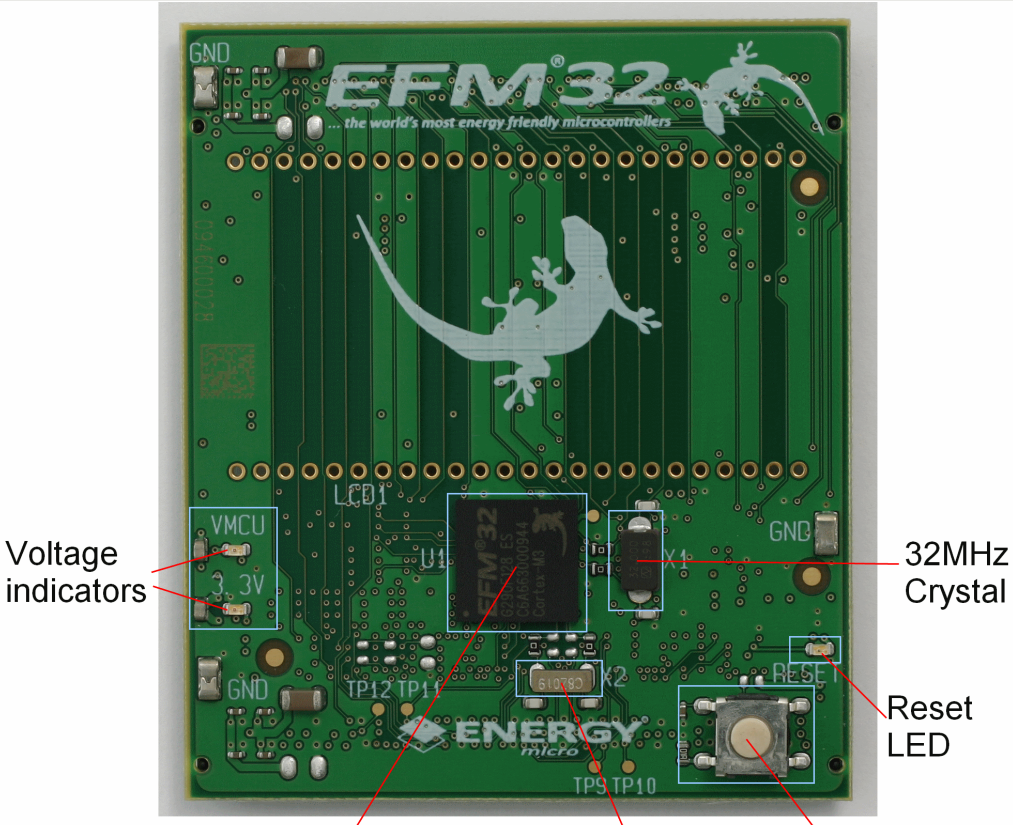

1 Usage

1.1 Placement

This board is intended for use with the EFM32 Gecko Development Kit.

1.2 Reset Button / Reset LED

When pressed, the reset button resets the EFM32 device. When reset is asserted, a red led next to the button is lit. A filter is connected to the reset line in order to reduce bouncing.

1.3 LEDs Indicating Power

The two green LEDs indicate power on the VMCU and 3.3V nets, respectively.

1.4 Crystal Oscillators

The board features one 32.768kHz and one 32MHz crystal. These are connected through 0-ohm resistors to the respective inputs of the low-frequency and high-frequency crystal oscillators of the EFM32. Using these instead of the internal RC-oscillators will ensure higher frequency accuracy. However, if the reduced accuracy is acceptable, theese lines can be used as normal IO-lines instead by removing the 0-ohm resistors. In order to export these IO lines to the Kit mainboard, insert resistors for connection to the EFM32_A bus. See schematic for details.

1.5 Kit Connection

It is possible to access the board controller on the Kit mainboard for example to turn LEDs on or off, read push button status or connecting the EMF32 to specific hardware on the mainboard. Accesses may be performed either through SPI or the parallel interface (EBI), and the access mode is signaled to the board controller by asserting one of two dedicated signal lines. It is recomended to use the Board Support Package (BSP) for access to the mainboard. Please see the Kit user guide for furhter description of the BSP.

EFM32 Gecko Development Kit
EFM32G290F128-BGA112 MCU board

BRD3300B	
Board Function	**Page**
Front Page	1
EFM32 Microcontroller	2
EFM32 Power	3
LCD Panel	4
EFM32 Connectors	5
Signal Assignments #1	6
Signal Assignments #2	7

Revision History

Rev.	Comment
A00	Initial version
A01	BOM changes. Removed pullup on reset button and some decoupling caps.

<Schematic Path>
TOP

Designed:	Approved:	Schematic Title: **EFM32 G290 MCU Board**	
		Page Title: **Front Page**	
Size: A3	BOM Doc No: <Cage Code>	Document number	Revision: A01
Design Created Date: Wednesday, December 03, 2008		Sheet Created Date: Tuesday, February 17, 2009	Sheet Modified Date: Thursday, July 01, 2010 / Sheet 1 of 7

5 4 3 2 1

D

C

B

A

(p 6) MCU_PA[15..0]
(p 5,6) MCU_PB[15..0]
(p 5,6) MCU_PC[15..0]
(p 5,7) MCU_PD[15..0]
(p 5,7) MCU_PE[15..0]
(p 5,7) MCU_PF[9..0]

U1B

PORT D

MCU_PD0	L11	D0 / USART1_TX #1 / PCNT2_S0IN #0 / ADC0_CH0
MCU_PD1	K11	D1 / TIMER0_CC0 #3 / USART1_RX #1 / PCNT2_S1IN #0 / ADC0_CH1
MCU_PD2	J9	D2 / TIMER0_CC1 #3 / USART1_CLK #1 / ADC0_CH2
MCU_PD3	J10	D3 / TIMER0_CC2 #3 / USART1_CS #1 / ADC0_CH3
MCU_PD4	J11	D4 / LEUART0_TX #0 / ADC0_CH4
MCU_PD5	H9	D5 / LEUART0_RX #0 / ADC0_CH5
MCU_PD6	H10	D6 / LETIMER0_OUT0 #0 / I2C0_SDA #1 / ADC0_CH6
MCU_PD7	H11	D7 / LETIMER0_OUT1 #0 / I2C0_SCL #1 / ADC0_CH7
MCU_PD8	H8	D8 / CMU_CLKOUT1 #1 / ADC0_VCM
MCU_PD9	D6	D9 / EBI_CS0 / LCD_SEG28
MCU_PD10	A5	D10 / EBI_CS1 / LCD_SEG29
MCU_PD11	B5	D11 / EBI_CS2 / LCD_SEG30
MCU_PD12	C5	D12 / EBI_CS3 / LCD_SEG31
MCU_PD13	C4	D13
MCU_PD14	H3	D14 / I2C0_SDA #3
MCU_PD15	J3	D15 / I2C0_SCL #3

PORT E

MCU_PE0	E9	E0 / UART0_TX #1 / PCNT0_S0IN #1
MCU_PE1	E10	E1 / UART0_RX #1 / PCNT0_S1IN #1
MCU_PE2	F10	E2 / ACMP0 _OUT #1
MCU_PE3	E11	E3 / ACMP1_OUT #1
MCU_PE4	A9	E4 / USART0_CS #1 / LCD_COM0
MCU_PE5	B9	E5 / USART0_CLK #1 / LCD_COM1
MCU_PE6	C9	E6 / USART0_RX #1 / LCD_COM2
MCU_PE7	D9	E7 / USART0_TX #1 / LCD_COM3
MCU_PE8	B4	E8 / EBI_AD0 / PCNT2_S0IN #1 / LCD_SEG4
MCU_PE9	A4	E9 / EBI_AD1 / PCNT2_S1IN #1 / LCD_SEG5
MCU_PE10	C3	E10 / EBI_AD2 / TIMER1_CC0 #1 / USART0_TX #0 / LCD_SEG6
MCU_PE11	B3	E11 / EBI_AD3 / TIMER1_CC1 #1 / USART0_RX #0 / LCD_SEG7
MCU_PE12	A3	E12 / EBI_AD4 / TIMER1_CC2 #1 / USART0_CLK #0 / LCD_SEG8
MCU_PE13	B2	E13 / EBI_AD5 / USART0_CS #0 / ACMP0_OUT #0 / LCD_SEG9
MCU_PE14	A2	E14 / EBI_AD6 / LEUART0_TX #2 / LCD_SEG10
MCU_PE15	A1	E15 / EBI_AD7 / LEUART0_RX #2 / LCD_SEG11

PORT F

MCU_PF0	E8	F0 / LETIMER0_OUT0 #2 / DBG_SWCLKTCK
MCU_PF1	D8	F1 / LETIMER0_OUT1 #2 / DBG_SWDITMS
MCU_PF2	C8	F2 / EBI_ARDY / ACMP1_OUT #0 / DBG_SWV #0 / LCD_SEG0
MCU_PF3	B8	F3 / TIMER0_CCC0 #2 / EBI_ALE / LCD_SEG1
MCU_PF4	A8	F4 / TIMER0_CCC1 #2 / EBI_WEn / LCD_SEG2
MCU_PF5	A7	F5 / TIMER0_CCC2 #2 / EBI_REn / LCD_SEG3
MCU_PF6	B7	F6 / TIMER0_CC0 #2 / UART0_TX #0 / LCD_SEG24
MCU_PF7	A6	F7 / TIMER0_CC1 #2 / UART0_RX #0 / LCD_SEG25
MCU_PF8	B6	F8 / TIMER0_CC2 #2 / LCD_SEG26
MCU_PF9	C6	F9 / LCD_SEG27

EFM32G290F128

U1A

PORT A

MCU_PA0	C2	A0 / TIMER0_CC0 #0,1 / EBI_AD9 / I2C0_SDA #0 / LCD_SEG13
MCU_PA1	C1	A1 / TIMER0_CC1 #0,1 / CMU_CLKOUT1 / EBI_AD10 / I2C0_SCL #0 / LCD_SEG14
MCU_PA2	D2	A2 / TIMER0_CC2 #0,1 / CMU_CLKOUT0 / EBI_AD11 / LCD_SEG15
MCU_PA3	D1	A3 / TIMER0_CCC0 #0 / EBI_AD12 / UART0_TX #2 / LCD_SEG16
MCU_PA4	E3	A4 / TIMER0_CCC1 #0 / EBI_AD13 / UART0_RX #2 / LCD_SEG17
MCU_PA5	E2	A5 / TIMER0_CCC2 #0 / EBI_AD14 / LEUART1_TX #1 / LCD_SEG18
MCU_PA6	E1	A6 / EBI_AD15 / LEUART1_RX #1 / LCD_SEG19
MCU_PA7	H4	A7 / LCD_SEG35
MCU_PA8	H5	A8 / TIMER2_CC0 #0 / LCD_SEG36
MCU_PA9	J5	A9 / TIMER2_CC1 #0 / LCD_SEG37
MCU_PA10	J6	A10 / TIMER2_CC2 #0 / LCD_SEG38
MCU_PA11	K5	A11 / LCD_SEG39
MCU_PA12	J4	A12 / TIMER2_CC0 #1 / LCD_BCAP_P
MCU_PA13	K3	A13 / TIMER2_CC1 #1 / LCD_BCAP_N
MCU_PA14	L3	A14 / TIMER2_CC2 #1 / LCD_BEXT
MCU_PA15	B1	A15 / EBI_AD8 / LCD_SEG12

PORT B

MCU_PB0	E4	B0 / TIMER1_CC0 #2 / LCD_SEG32
MCU_PB1	F1	B1 / TIMER1_CC1 #2 / LCD_SEG33
MCU_PB2	F2	B2 / TIMER1_CC2 #2 / LCD_SEG34
MCU_PB3	F3	B3 / USART2_TX #1 / PCNT1_S0IN #1 / LCD_SEG20
MCU_PB4	F4	B4 / USART2_RX #1 / PCNT1_S1IN #1 / LCD_SEG21
MCU_PB5	G1	B5 / USART2_CLK #1 / LCD_SEG22
MCU_PB6	G2	B6 / USART2_CS #1 / LCD_SEG23
MCU_PB7	K1	B7 / USART1_CLK #0/ LFXTAL_P
MCU_PB8	L1	B8 / USART1_CS #0 / LFXTAL _N
MCU_PB9	J7	B9
MCU_PB10	J8	B10
MCU_PB11	L5	B11 / LETIMER0_OUT0 #1 / DAC0_OUT0
MCU_PB12	L6	B12 / LETIMER0_OUT1 #1 / DAC0_OUT1
MCU_PB13	L8	B13 / LEUART0_TX #1 / HFXTAL_P
MCU_PB14	L9	B14 / LEUART0_RX #1 / HFXTAL_N
MCU_PB15	D3	B15

PORT C

MCU_PC0	H1	C0 / USART1_TX #0 / PCNT0_S0IN #2 / ACMP0_CH0
MCU_PC1	J1	C1 / USART1_RX #0 / PCNT0_S1IN #2 / ACMP0_CH1
MCU_PC2	H2	C2 / USART2_TX #0 / ACMP0_CH2
MCU_PC3	J2	C3 / USART2_RX #0 / ACMP0_CH3
MCU_PC4	K2	C4 / USART2_CLK #0 / LETIMER_OUT0 #3 / PCNT1_S0IN #0 / ACMP0_CH4
MCU_PC5	L2	C5 / USART2_CS #0 / LETIMER_OUT1 #3 / PCNT1_S1IN #0 / ACMP0_CH5
MCU_PC6	G10	C6 / LEUART1_TX #0 / I2C0_SDA #2 / ACMP0_CH6
MCU_PC7	G11	C7 / LEUART1_RX #0 / I2C0_SCL #2 / ACMP0_CH7
MCU_PC8	D10	C8 / TIMER2_CC0 #2 / USART0_CS #2 / ACMP1_CH0
MCU_PC9	D11	C9 / TIMER2_CC1 #2 / USART0_CLK #2 / ACMP1_CH1
MCU_PC10	C10	C10 / TIMER2_CC2 #2 / USART0_RX #2 / ACMP1_CH2
MCU_PC11	C11	C11 / USART0_TX #2 / ACMP1_CH3
MCU_PC12	B10	C12 / CMU_CLKOUT0 #1 / ACMP1_CH4
MCU_PC13	B11	C13 / TIMER0_CCC0 #1,3 / TIMER1_CC0 #0 / PCNT0_S0IN #0 / ACMP1_CH5
MCU_PC14	A10	C14 / TIMER0_CCC1 #1,3 / TIMER1_CC1 #0 / UART0_TX #3 / PCNT0_S1IN #0 / ACMP1_CH6
MCU_PC15	A11	C15 / TIMER0_CCC2 #1,3 / TIMER1_CC2 #0 / UART0_RX #3 / DBG_SWV #1 / ACMP1_CH7

EFM32G290F128

/
TOP

Schematic Title: **EFM32 G290 MCU Board**			
Page Title: **MCU**			
Designed:	Approved:	Document number	Revision: A01
Size: A3	BOM Doc No: <Cage Code>		
Design Created Date: Wednesday, December 03, 2008	Sheet Created Date: Tuesday, April 07, 2009	Sheet Modified Date: Thursday, July 01, 2010	Sheet 2 of 7

Reset Circuit

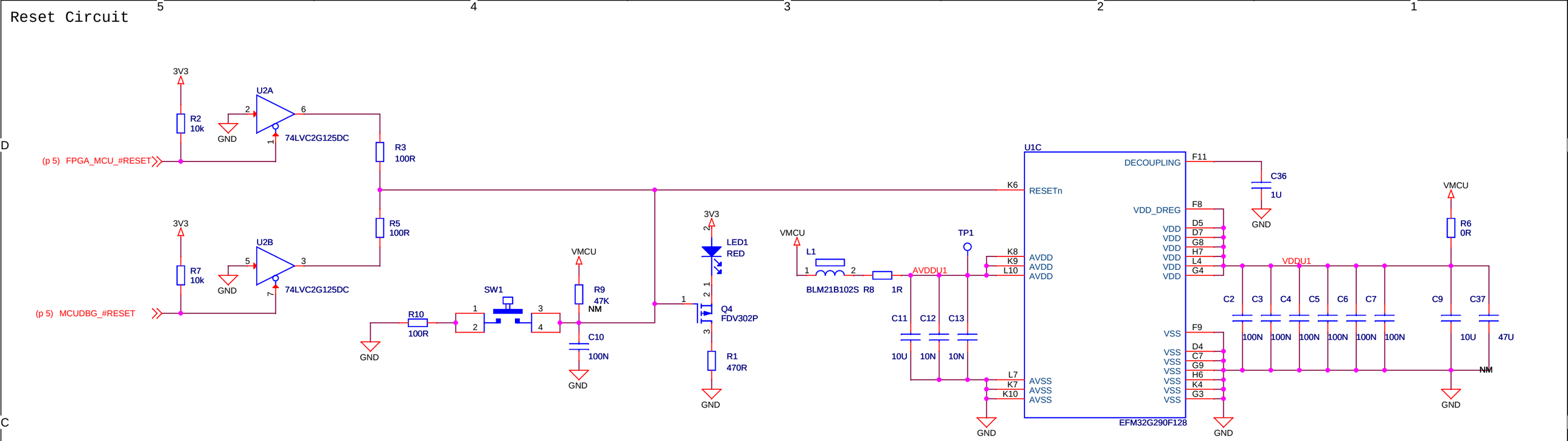

Decoupling

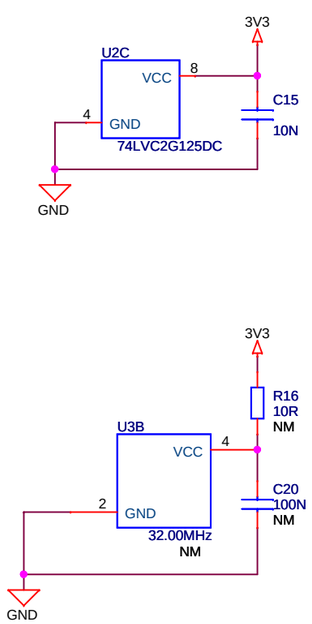

High Frequency Clock

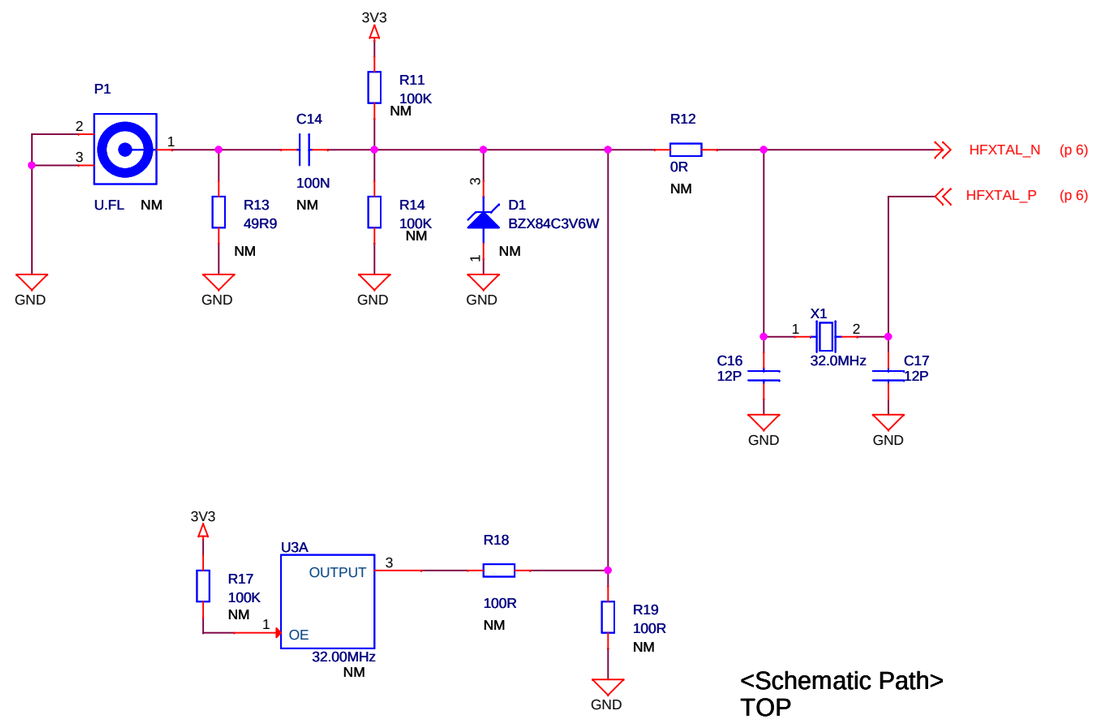

Low Frequency Clock

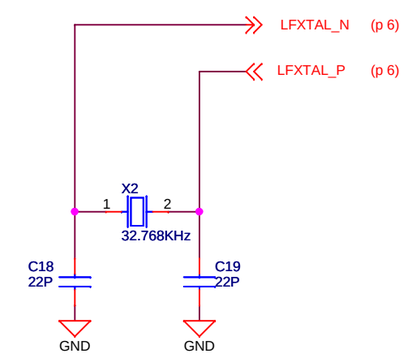

<Schematic Path>
TOP

Schematic Title	EFM32 G290 MCU Board
Page Title	EFM32 Power
Designed:	
Approved:	
Size	A3
BOM Doc No:	<Cage Code>
Document number	
Revision	A01
Design Created Date:	Wednesday, December 03, 2008
Sheet Created Date	Wednesday, July 15, 2009
Sheet Modified Date	Thursday, July 01, 2010
Sheet	3 of 7

LCD signal connections

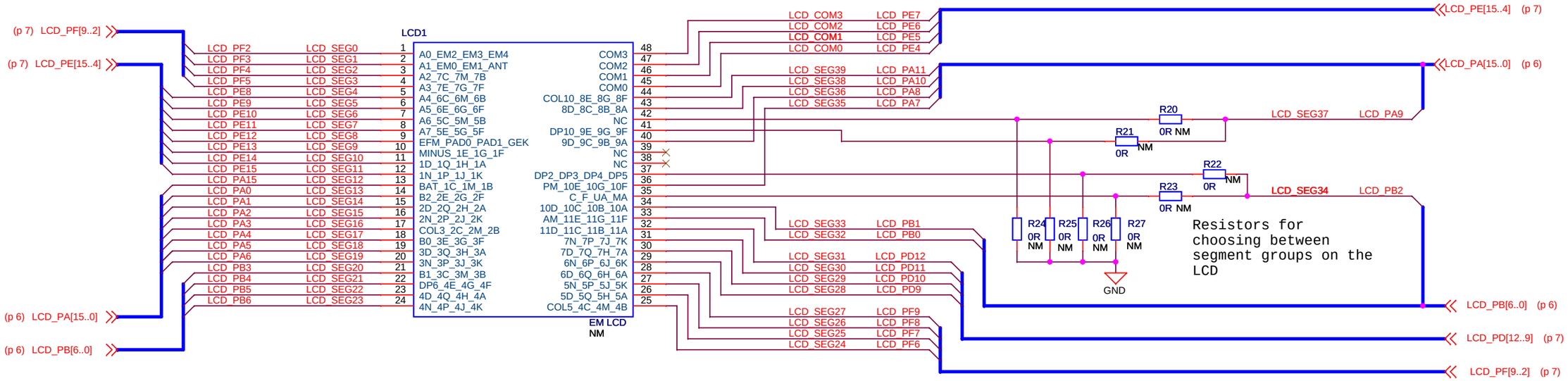

Segment names

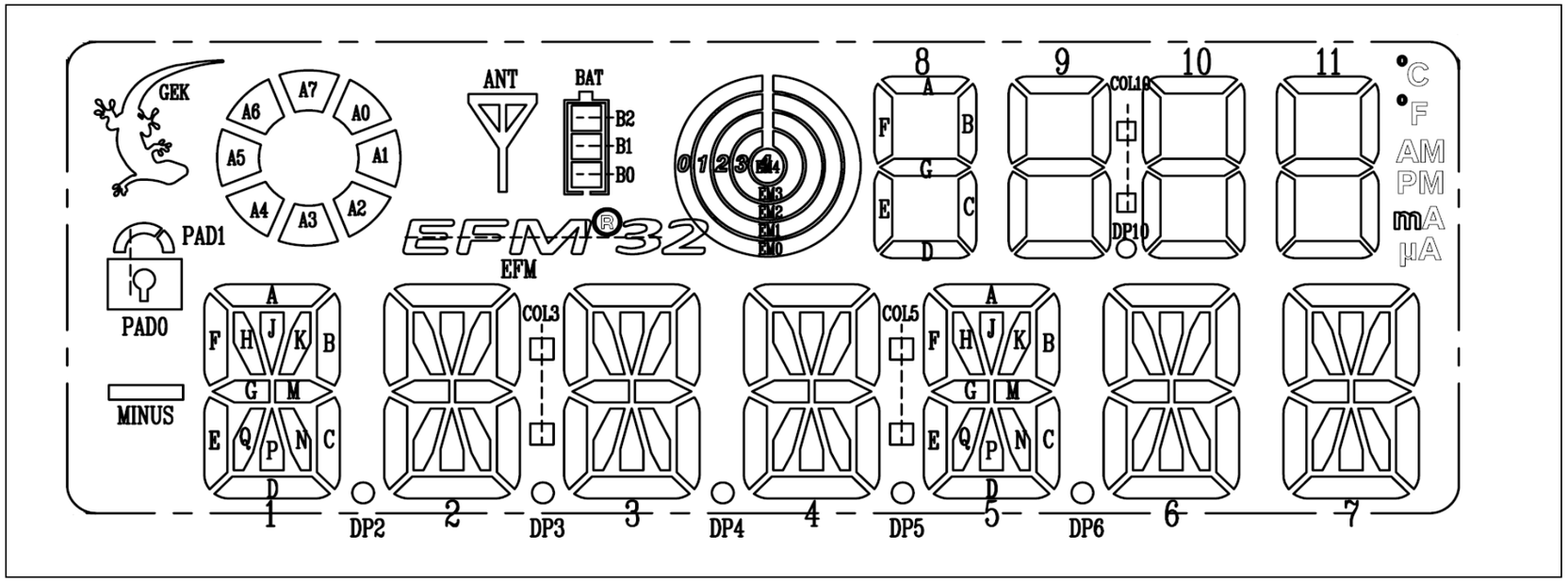

<Schematic Path>
TOP

Schematic Title	EFM32 G290 MCU Board
Page Title	LCD panel
Designed:	Approved:
Size	A3
BOM Doc No:	<Cage Code>
Document number	
Revision	A01
Design Created Date:	Wednesday, December 03, 2008
Sheet Created Date	Tuesday, July 14, 2009
Sheet Modified Date	Thursday, July 01, 2010
Sheet	4 of 7

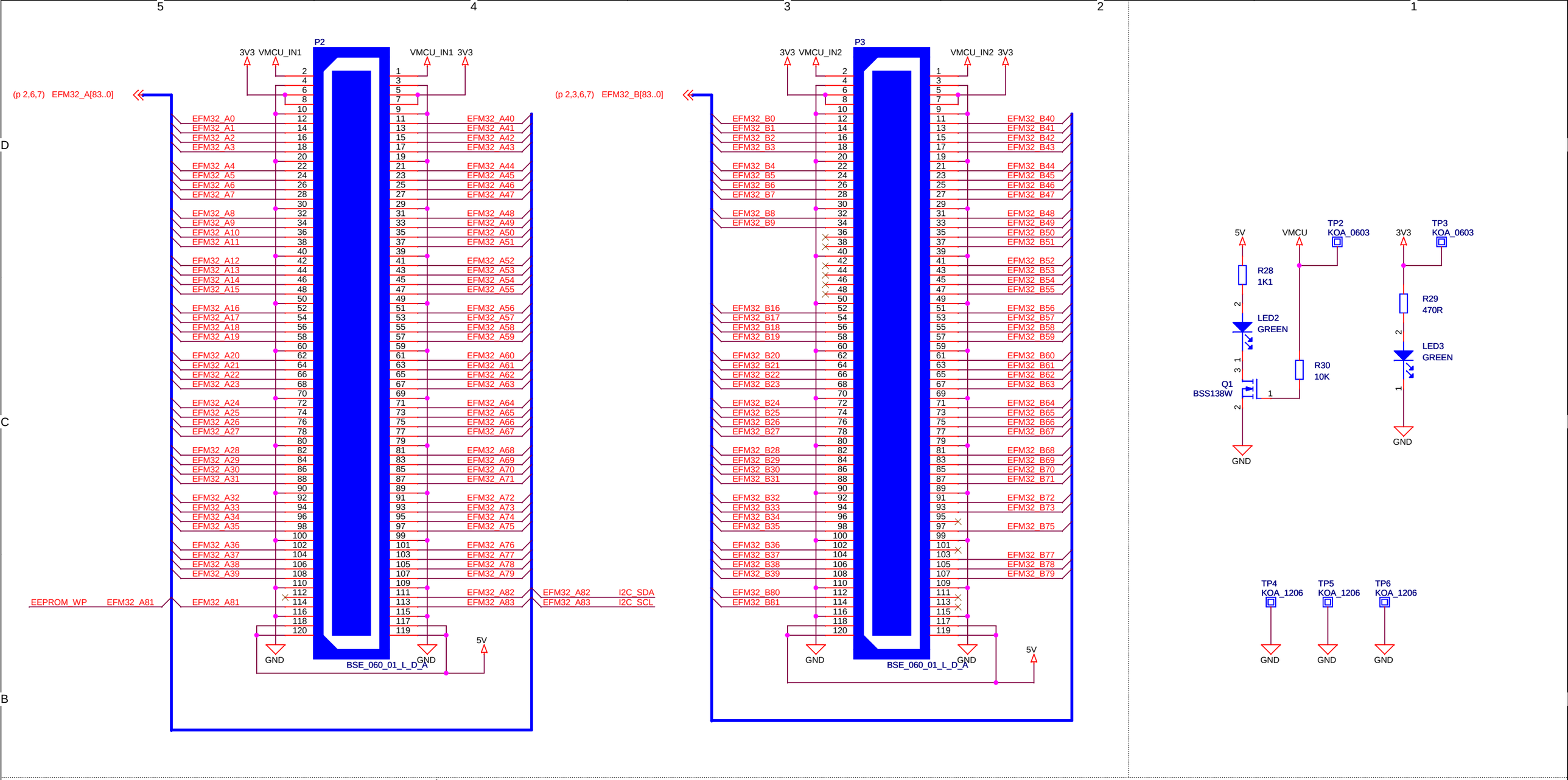

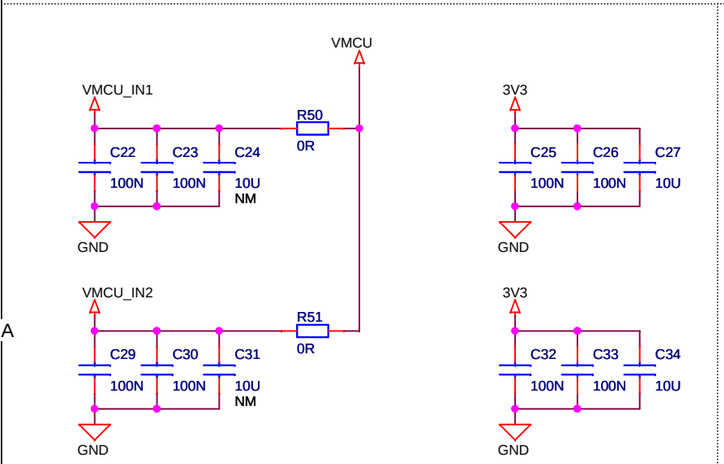

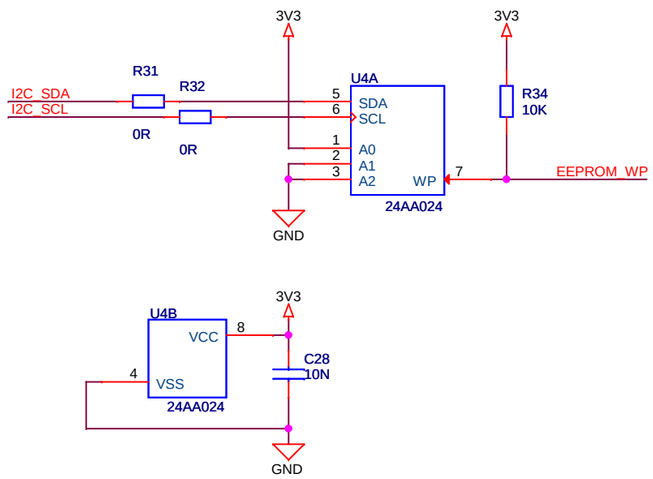

<Schematic Path>
TOP

Schematic Title	**EFM32 G290 MCU Board**
Page Title	**EFM32 Connectors**
Designed:	Approved:
Size A3	BOM Doc No: <Cage Code>
Document number	Revision A01
Design Created Date: Wednesday, December 03, 2008	Sheet Created Date Monday, March 16, 2009
Sheet Modified Date Thursday, July 01, 2010	Sheet 5 of 7

PA Connections

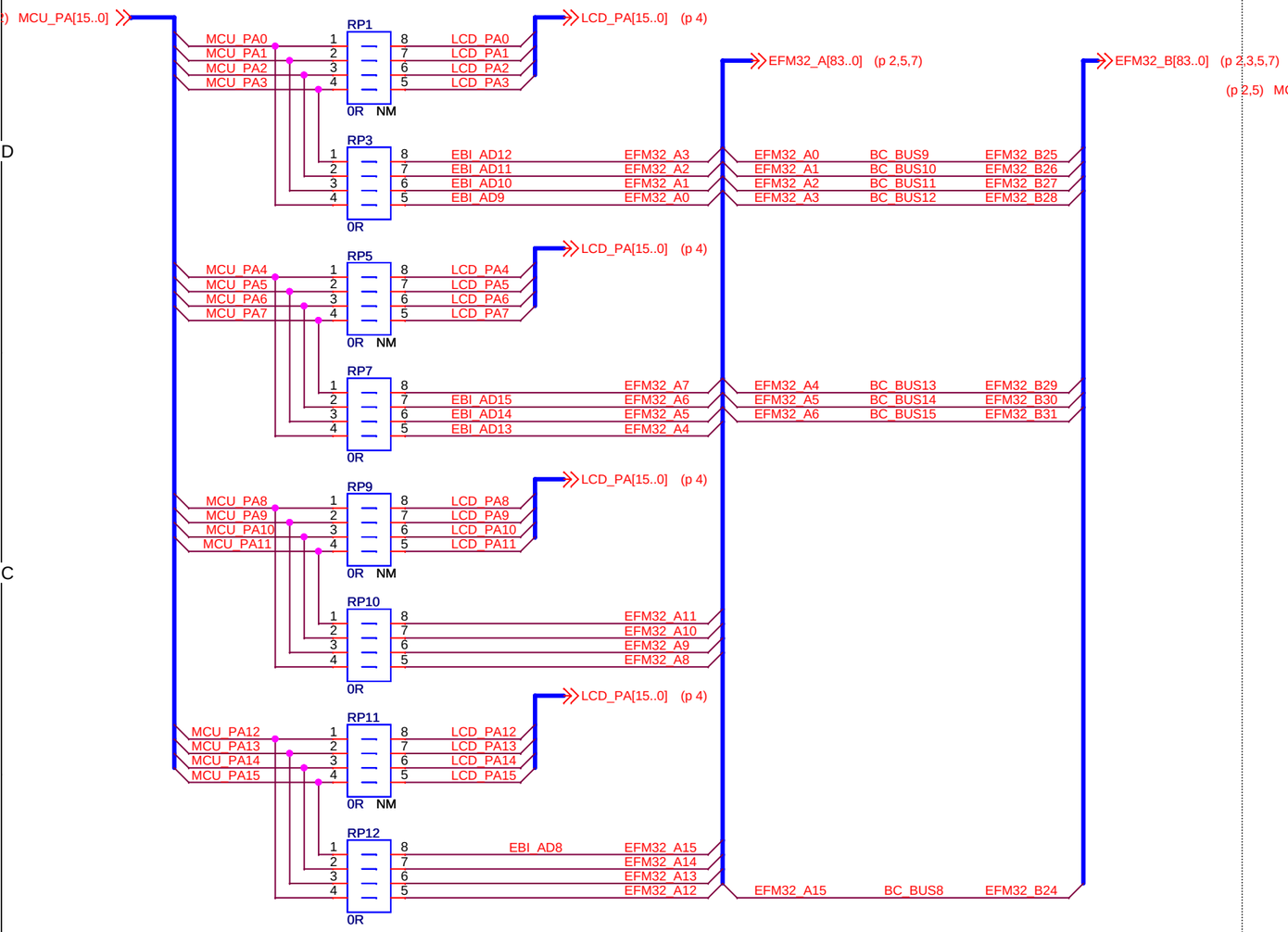

PB Connections

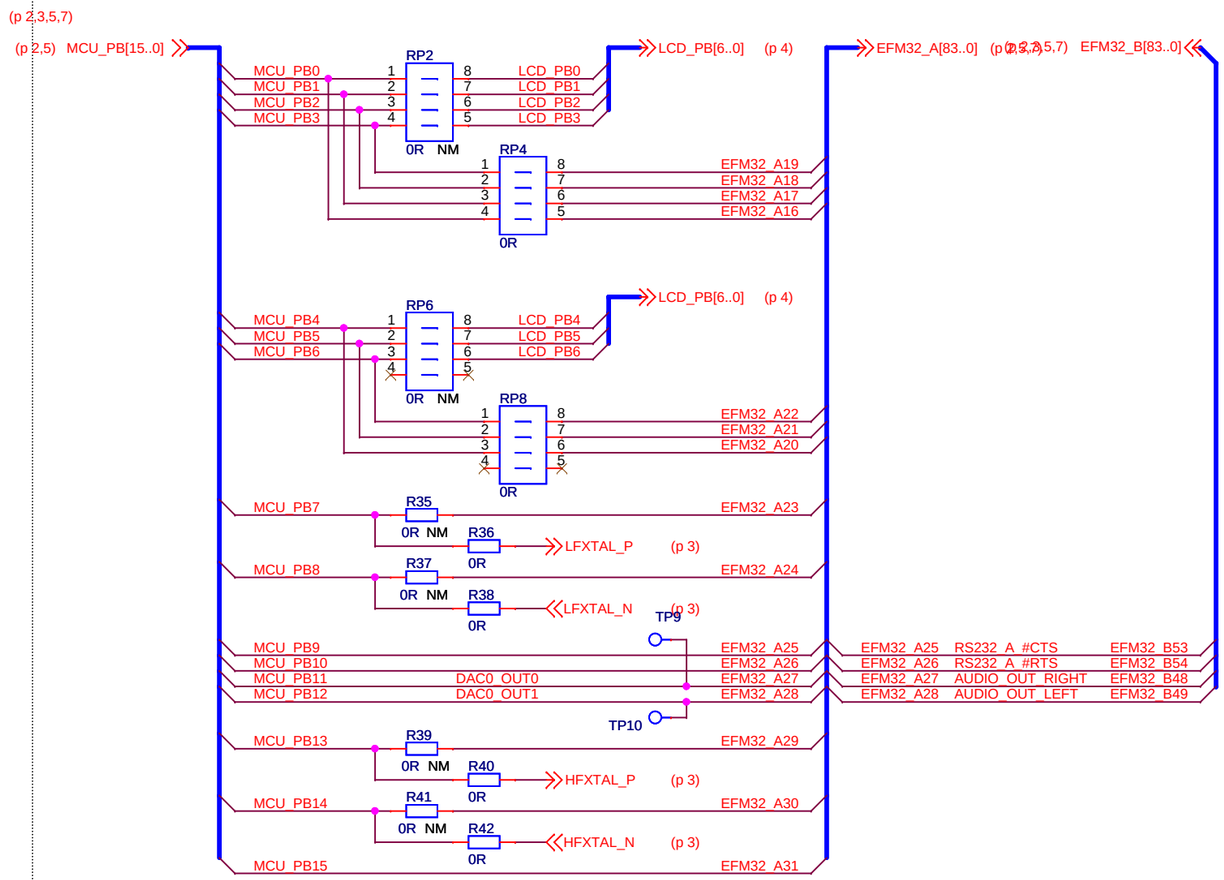

PC Connections

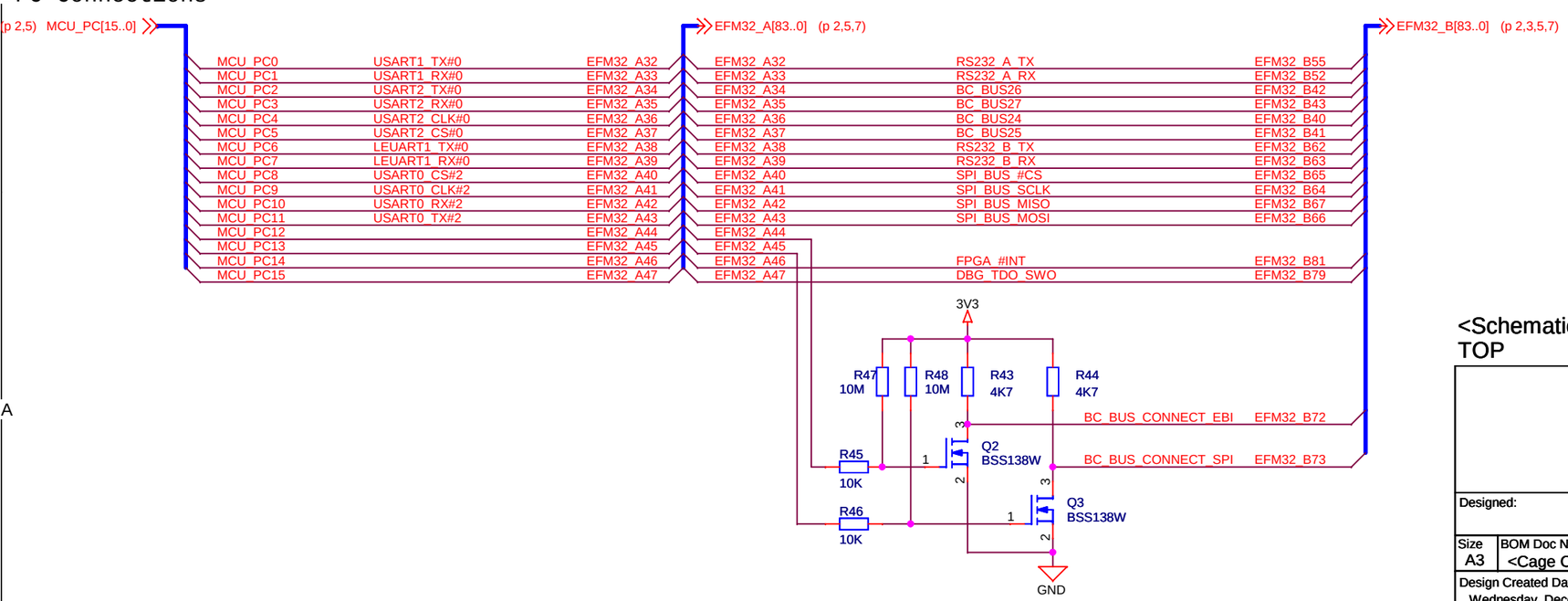

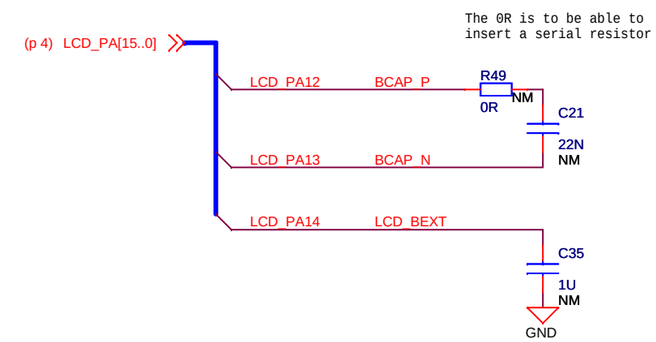

Capacitors for LCD voltage booster

<Schematic Path>
TOP

Designed:	Approved:	Schematic Title: **EFM32 G290 MCU Board**	
		Page Title: **Signal Assignments #1**	
Size A3	BOM Doc No: <Cage Code>	Document number	Revision A01
Design Created Date: Wednesday, December 03, 2008		Sheet Created Date: Monday, August 03, 2009	Sheet Modified Date: Thursday, July 01, 2010
			Sheet 6 of 7

PD Connections

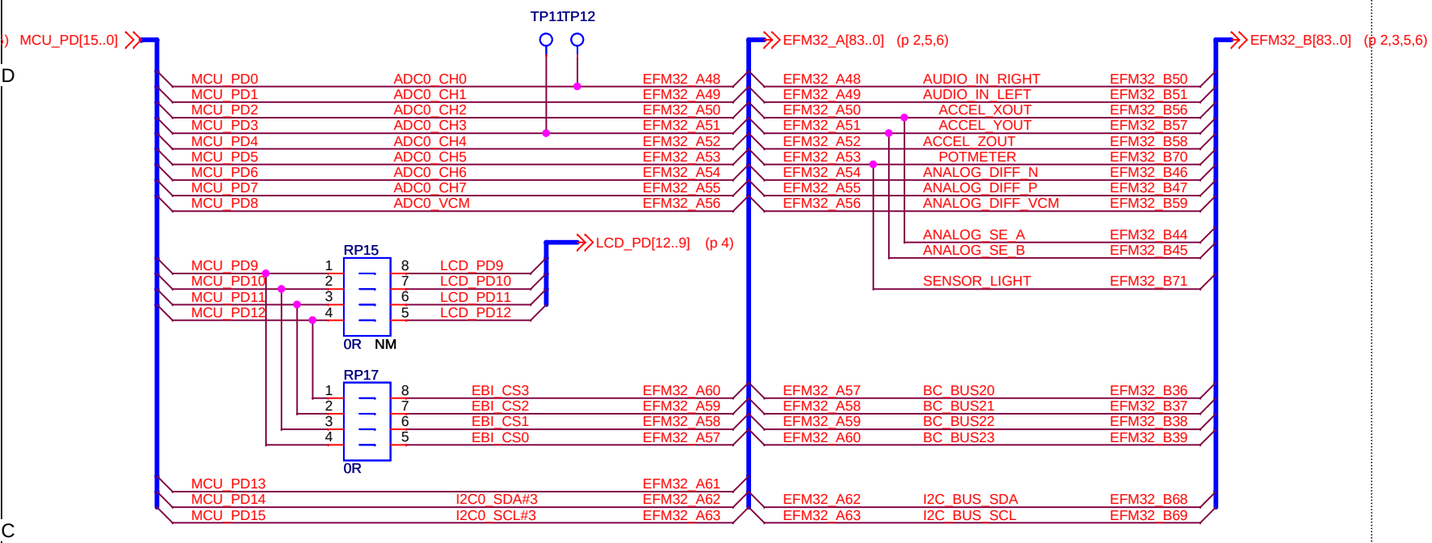

PE Connections

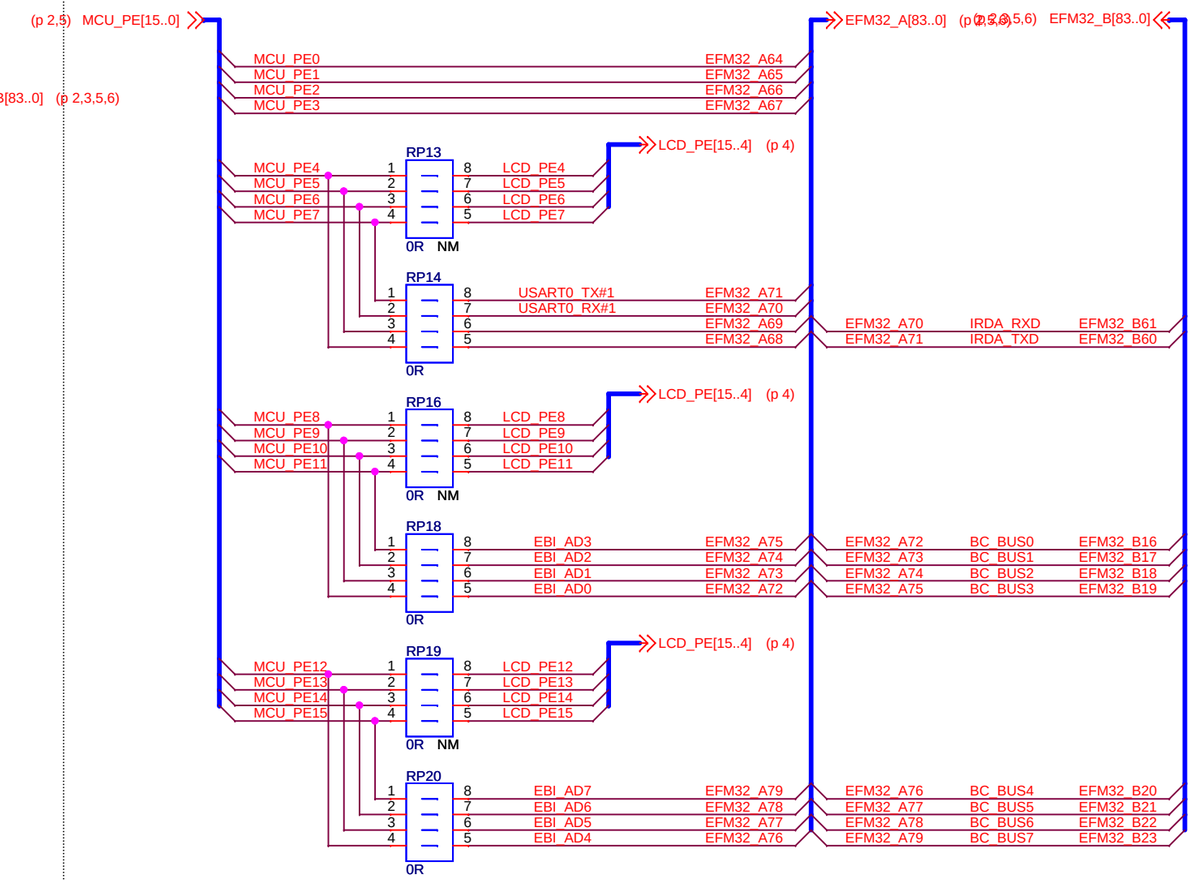

PF Connections

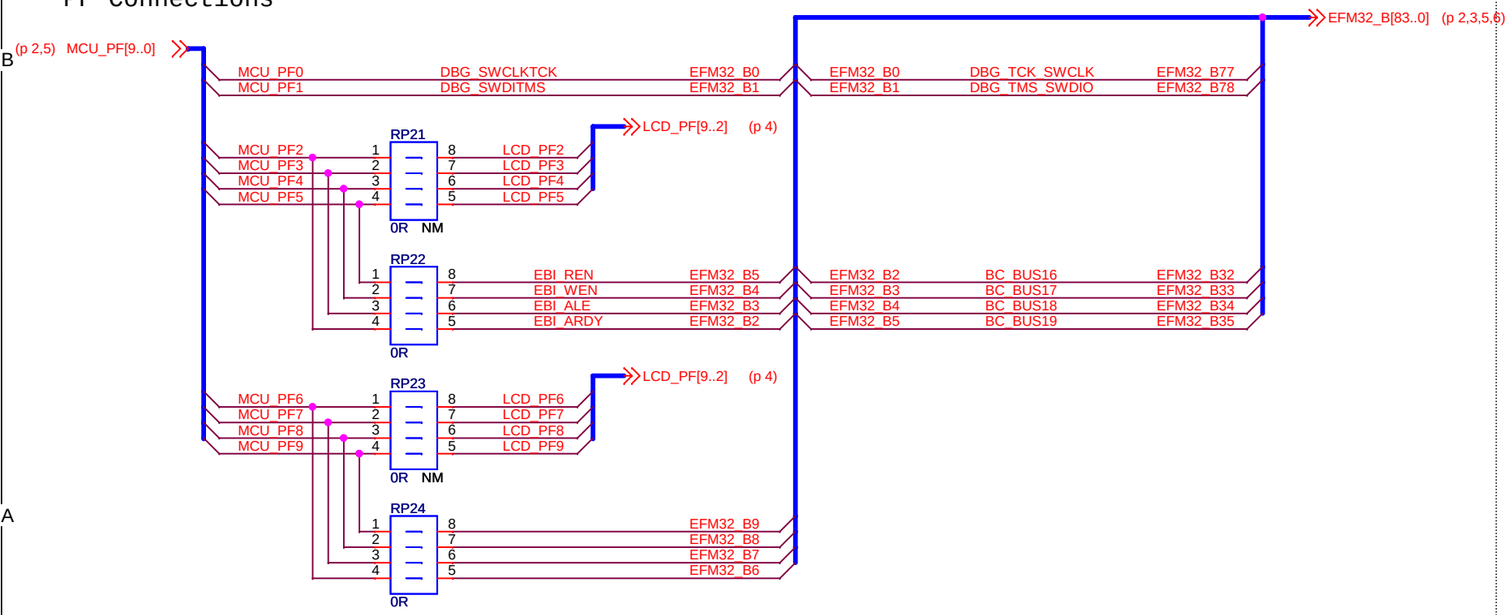

Reset connections

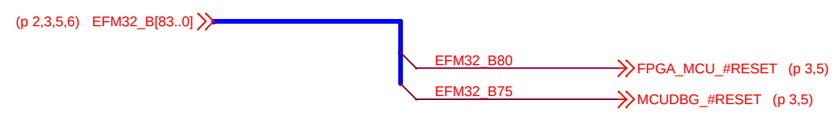

<Schematic Path>
TOP

Schematic Title: **EFM32 G290 MCU Board**			
Page Title: **Signal Assignments #2**			
Designed:	Approved:	Document number	Revision: A01
Size: A3	BOM Doc No: <Cage Code>		
Design Created Date: Wednesday, December 03, 2008		Sheet Created Date: Tuesday, August 04, 2009	Sheet Modified Date: Thursday, July 01, 2010
			Sheet 7 of 7

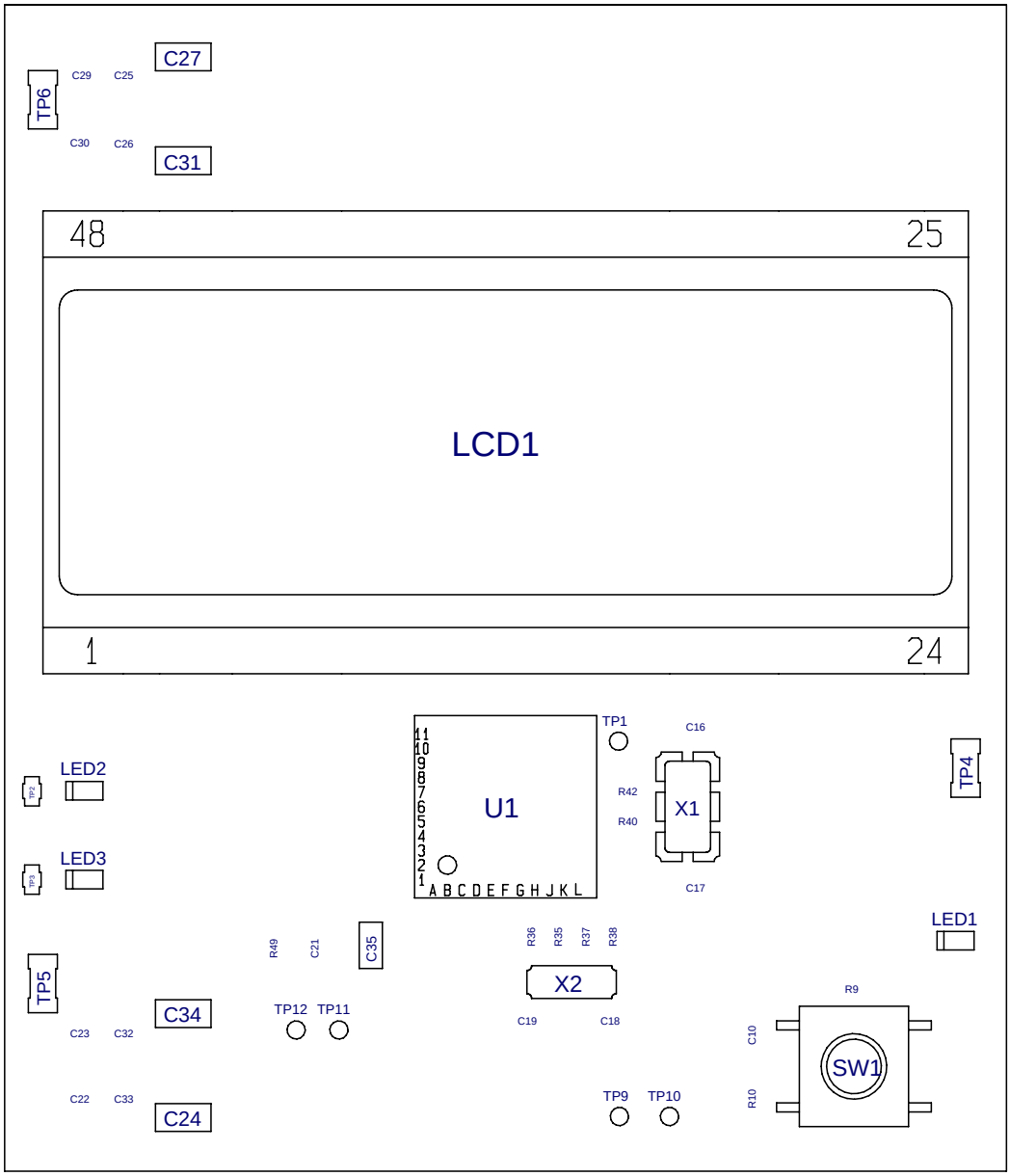

ENERGY micro	Utført (også faktaansvarig hvis annen) - *Prepared (also subject responsible if other)*		
Referanser - *References*	Dokansv/Godk - *Doc respons/Approved*	Dato - *Date* 2009-10-08	Rev B
EFM32 BGA112 BOARD	Produktbetegnelse - *Product name* PRINTED BOARD ASSEMBLY		
(Scale 2.5 : 1)	Dokumentnr - *Document No.* BRD33002.0		Side - *Sheet* 1 (2)

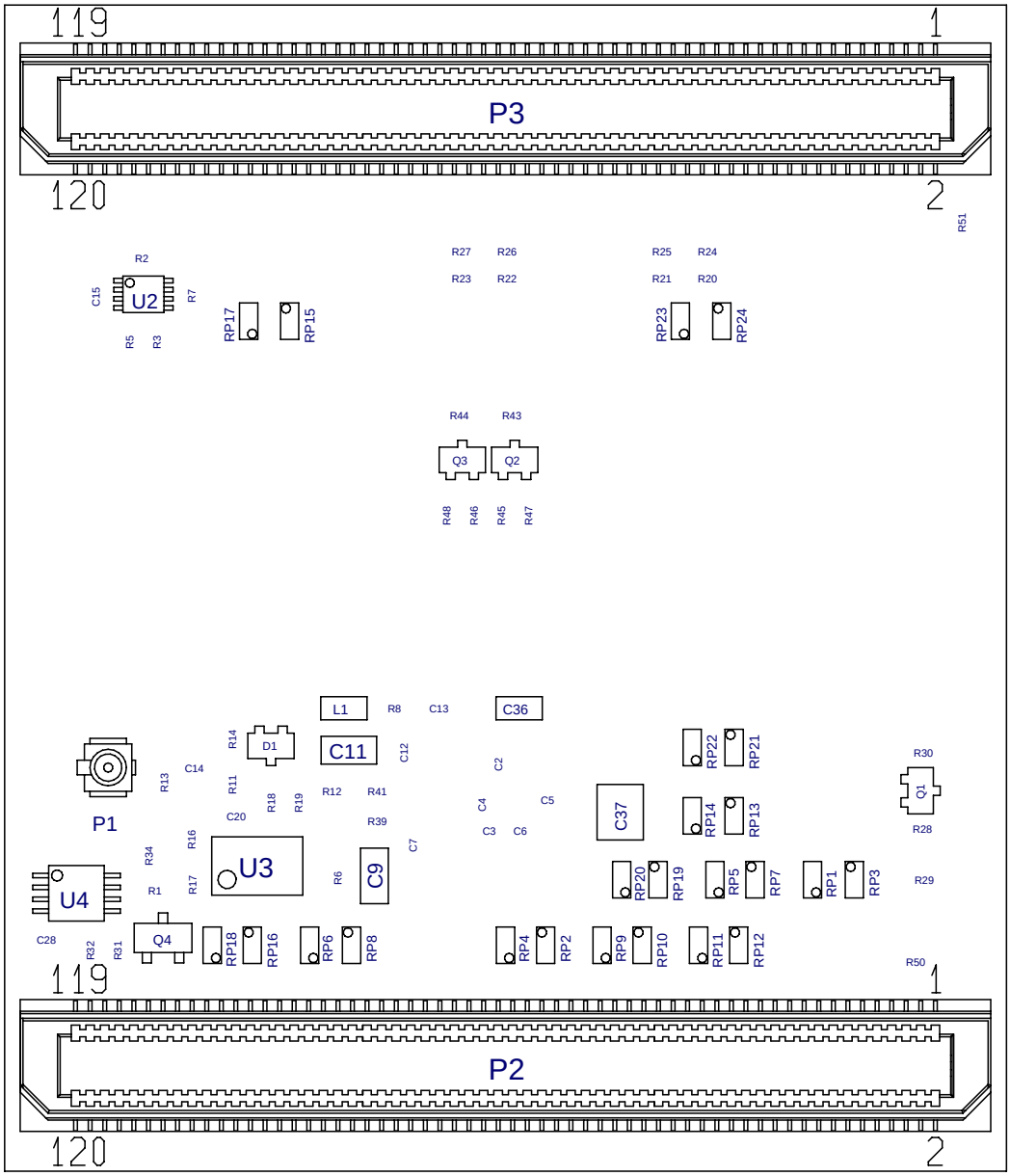

ENERGY micro	Utført (også faktaansvarig hvis annen) - *Prepared (also subject responsible if other)*		
Referanser - *References*	Dokansv/Godk - *Doc respons/Approved*	Dato - *Date* 2009-10-08	Rev B
EFM32 BGA112 BOARD	Produktbetegnelse - *Product name* PRINTED BOARD ASSEMBLY		
(Scale 2.5 : 1)	Dokumentnr - *Document No.* BRD33002.0		Side - *Sheet* 2 (2)

Energy Micro AS
Sandakerveien 118
P.O. Box 4633 Nydalen
N-0405 Oslo
Norway

www.energymicro.com