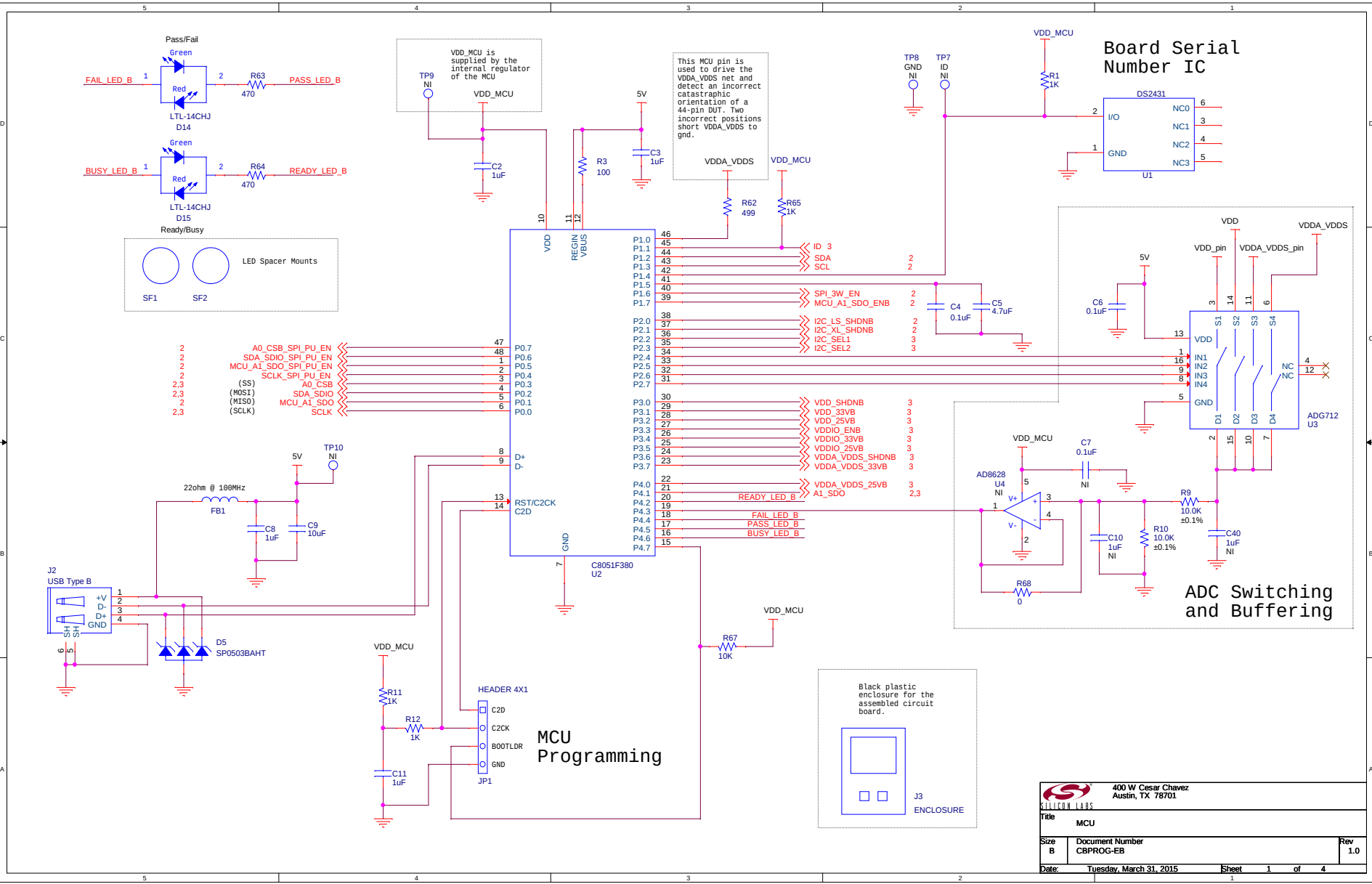
Pass/Fail
Green
Red
FAIL_LED_B
PASS_LED_B
R63
470
LTL-14CHJ
D14
BUSY_LED_B
READY_LED_B
R64
470
LTL-14CHJ
D15
Ready/Busy
LED Spacer Mounts
SF1
SF2
VDD_MCU is supplied by the internal regulator of the MCU
TP9
NI
VDD_MCU
C2
1uF
5V
R3
100
C3
1uF
This MCU pin is used to drive the VDDA_VDDS net and detect an incorrect catastraphic orientation of a 44-pin DUT. Two incorrect positions short VDDA_VDDS to gnd.
VDDA_VDDS
VDD_MCU
R62
499
R65
1K
VDD
REGIN
VBUS
P1.0
P1.1
P1.2
P1.3
P1.4
P1.5
P1.6
P1.7
P2.0
P2.1
P2.2
P2.3
P2.4
P2.5
P2.6
P2.7
P3.0
P3.1
P3.2
P3.3
P3.4
P3.5
P3.6
P3.7
P4.0
P4.1
P4.2
P4.3
P4.4
P4.5
P4.6
P4.7
ID_3
SDA
SCL
SPI_3W_EN
MCU_A1_SDO_ENB
I2C_LS_SHDNB
I2C_XL_SHDNB
I2C_SEL1
I2C_SEL2
VDD_SHDNB
VDD_33VB
VDD_25VB
VDDIO_ENB
VDDIO_33VB
VDDIO_25VB
VDDA_VDDS_SHDNB
VDDA_VDDS_33VB
VDDA_VDDS_25VB
A1_SDO
READY_LED_B
FAIL_LED_B
PASS_LED_B
BUSY_LED_B
C4
0.1uF
C5
4.7uF
A0_CSB_SPI_PU_EN
SDA_SDIO_SPI_PU_EN
MCU_A1_SDO_SPI_PU_EN
SCLK_SPI_PU_EN
A0_CSB
SDA_SDIO
MCU_A1_SDO
SCLK
P0.7
P0.6
P0.5
P0.4
P0.3
P0.2
P0.1
P0.0
D+
D-
RST/C2CK
C2D
GND
C8051F380
U2
TP10
NI
22ohm @ 100MHz
FB1
C8
1uF
C9
10uF
J2
USB Type B
+V
D-
D+
GND
D5
SP0503BAHT
VDD_MCU
R11
1K
R12
1K
C11
1uF
HEADER 4X1
C2D
C2CK
BOOTLDR
GND
JP1
MCU Programming
R67
10K
Black plastic enclosure for the assembled circuit board.
J3
ENCLOSURE
TP8
GND
NI
TP7
ID
NI
R1
1K
Board Serial Number IC
DS2431
I/O
GND
NC0
NC1
NC2
NC3
U1
VDD
VDDA_VDDS
VDD_pin
VDDA_VDDS_pin
C6
0.1uF
S1
S2
S3
S4
IN1
IN2
IN3
IN4
NC
D1
D2
D3
D4
ADG712
U3
AD8628
U4
NI
V+
V-
C7
0.1uF
NI
R9
10.0K
±0.1%
C10
1uF
NI
R10
10.0K
±0.1%
C40
1uF
NI
R68
0
ADC Switching and Buffering
400 W Cesar Chavez
Austin, TX 78701
SILICON LABS
Title
MCU
Size
B
Document Number
CBPROG-EB
Rev
1.0
Date:
Tuesday, March 31, 2015
Sheet
1
of
4

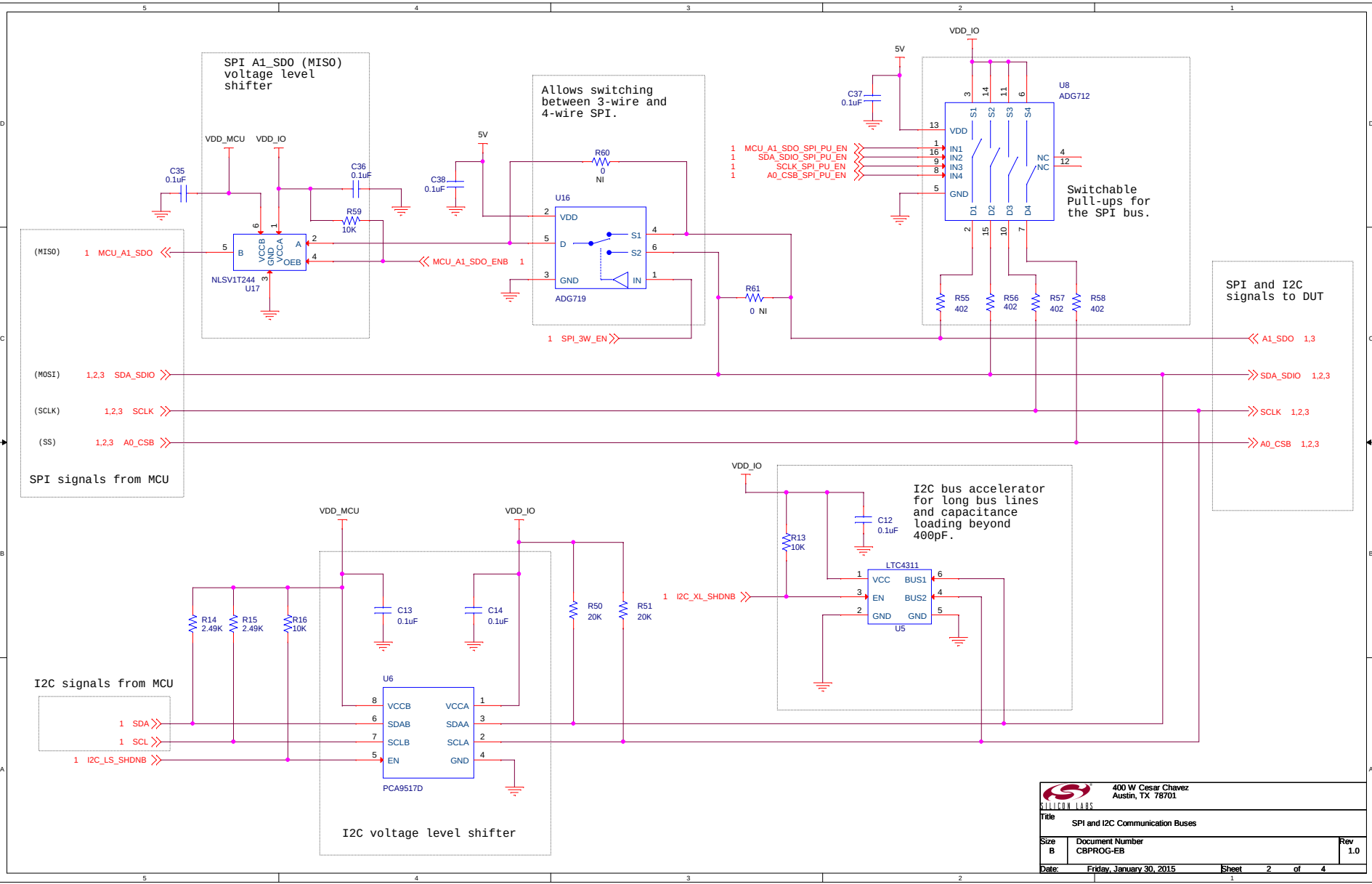
SPI A1_SDO (MISO) voltage level shifter
VDD_MCU
VDD_IO
C35 0.1uF
C36 0.1uF
R59 10K
NLSV1T244 U17
VCCB GND VCCA
B A OEB
(MISO) 1 MCU_A1_SDO
MCU_A1_SDO_ENB 1
Allows switching between 3-wire and 4-wire SPI.
5V
C38 0.1uF
R60 0 NI
U16
VDD D GND S1 S2 IN
ADG719
1 SPI_3W_EN
R61 0 NI
VDD_IO
5V
C37 0.1uF
U8 ADG712
S1 S2 S3 S4
VDD IN1 IN2 IN3 IN4 GND
D1 D2 D3 D4
NC NC
1 MCU_A1_SDO_SPI_PU_EN
1 SDA_SDIO_SPI_PU_EN
1 SCLK_SPI_PU_EN
1 A0_CSB_SPI_PU_EN
Switchable Pull-ups for the SPI bus.
R55 402
R56 402
R57 402
R58 402
SPI and I2C signals to DUT
A1_SDO 1,3
SDA_SDIO 1,2,3
SCLK 1,2,3
A0_CSB 1,2,3
(MOSI) 1,2,3 SDA_SDIO
(SCLK) 1,2,3 SCLK
(SS) 1,2,3 A0_CSB
SPI signals from MCU
VDD_IO
C12 0.1uF
R13 10K
I2C bus accelerator for long bus lines and capacitance loading beyond 400pF.
LTC4311
VCC EN GND BUS1 BUS2 GND
U5
1 I2C_XL_SHDNB
VDD_MCU
VDD_IO
R14 2.49K
R15 2.49K
R16 10K
C13 0.1uF
C14 0.1uF
R50 20K
R51 20K
U6
VCCB SDAB SCLB EN
VCCA SDAA SCLA GND
PCA9517D
I2C signals from MCU
1 SDA
1 SCL
1 I2C_LS_SHDNB
I2C voltage level shifter
400 W Cesar Chavez
Austin, TX 78701
SILICON LABS
Title
SPI and I2C Communication Buses
Size B
Document Number CBPROG-EB
Rev 1.0
Date: Friday, January 30, 2015
Sheet 2 of 4

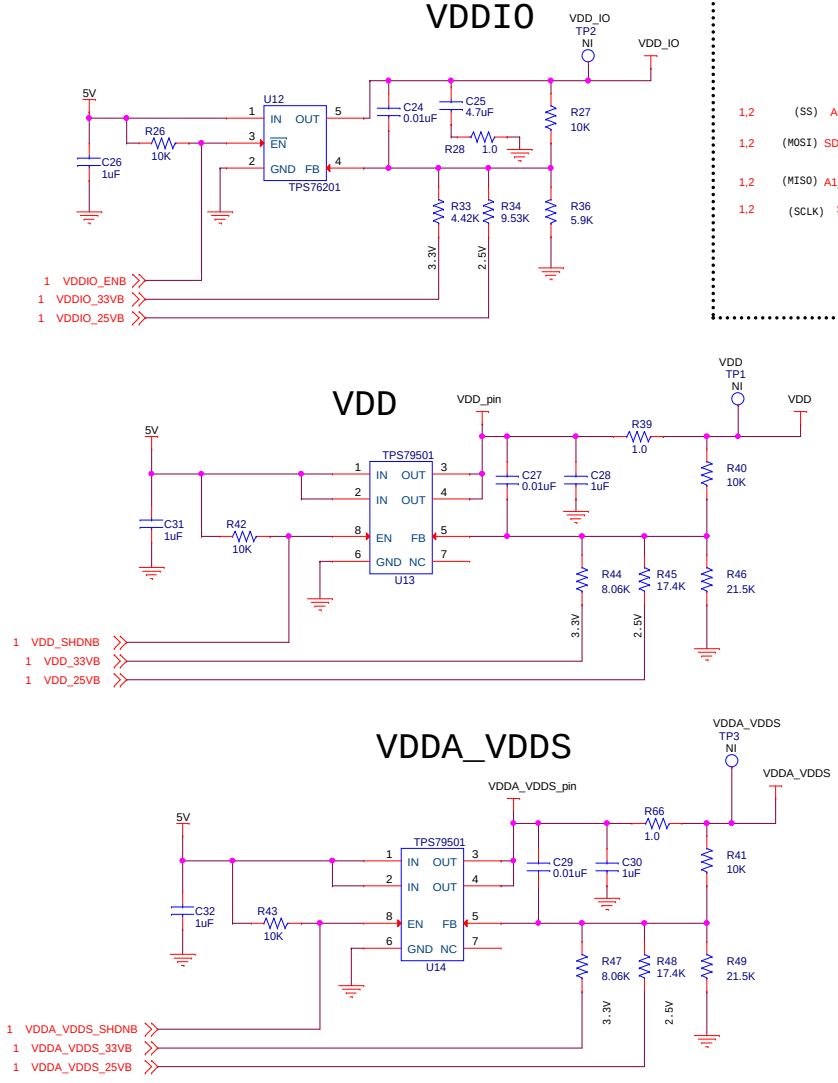

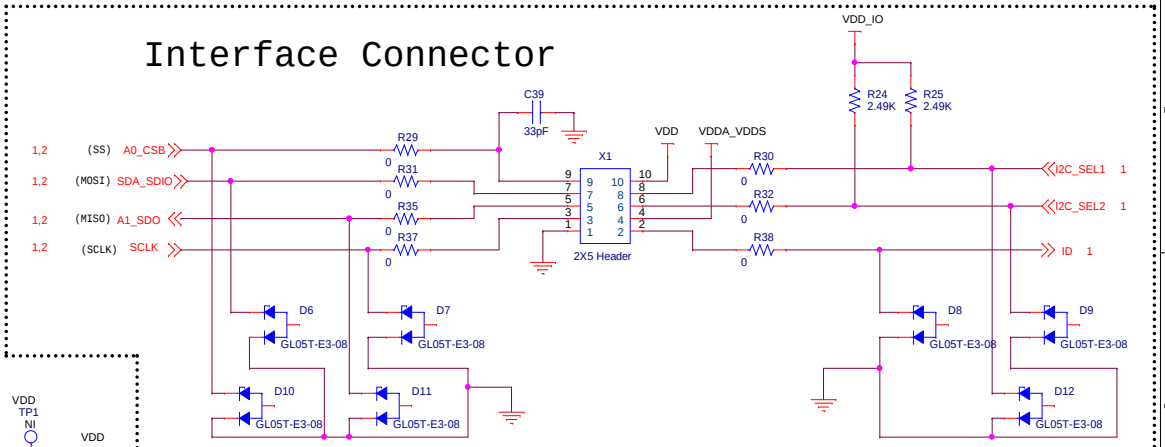

Pin #	Description	I2C	4-wire SPI	3-wire SPI
1	GND	GND	GND	GND
2	ID	The programming socket boards provide a signal on this pin that allows for the identification of the socket board. For in-system programming, this pin should not be connected.	The programming socket boards provide a signal on this pin that allows for the identification of the socket board. For in-system programming, this pin should not be connected.	The programming socket boards provide a signal on this pin that allows for the identification of the socket board. For in-system programming, this pin should not be connected.
3	SCLK	Serial clock signal for I2C transcations. (SCLK)	Serial clock signal for I2C transactions. (SCLK)	Serial clock signal for I2C transactions. (SCLK)
4	VDDA_VDDS	Supplies the VDDA and VDDS voltages to the DUT when using a programming socket board. Do not use this pin for in-system programming.	Supplies the VDDA and VDDS voltages to the DUT when using a programming socket board. Do not use this pin for in-system programming.	Supplies the VDDA and VDDS voltages to the DUT when using a programming socket board. Do not use this pin for in-system programming.
5	A1_SDO	Can be used to set I2C address bit A1 high or low. Routed to A1 DUT pin on the programming socket boards.	Serial data in from DUT for 4-wire SPI transactions (MISO).	Not used for 3-wire SPI
6	I2C_SEL2	Can be used to set I2C_SEL signal high to set the DUT for I2C communication. (Refer to specific part pinout and the programming socket board to determine whether to use I2C_SEL1 or I2C_SEL2)	Can be used to set I2C_SEL signal low to set the DUT for I2C communication. (Refer to specific part pinout and the programming socket board to determine whether to use I2C_SEL1 or I2C_SEL2)	Can be used to set I2C_SEL signal low to set the DUT for I2C communication. (Refer to specific part pinout and the programming socket board to determine whether to use I2C_SEL1 or I2C_SEL2)
7	SDA_SDIO	Serial data signal for I2C transactions.	Serial data out to DUT for 4-wire SPI transactions (MOSI).	Bidirectional Serial data for 3-wire SPI transactions (SDIO).
8	I2C_SEL1	Can be used to set I2C_SEL signal high to set the DUT for I2C communication. (Refer to specific part pinout and the programming socket board to determine whether to use I2C_SEL1 or I2C_SEL2)	Can be used to set I2C_SEL signal low to set the DUT for I2C communication. (Refer to specific part pinout and the programming socket board to determine whether to use I2C_SEL1 or I2C_SEL2)	Can be used to set I2C_SEL signal low to set the DUT for I2C communication. (Refer to specific part pinout and the programming socket board to determine whether to use I2C_SEL1 or I2C_SEL2)
9	A0_CSB	Can be used to set I2C address bit A0 high or low. Routed to A0 DUT pin on the programming socket boards.	Drives the chip select signal during SPI transactions (SS).	Drives the chip select signal during SPI transactions (SS).
10	VDD	Supplies the VDD voltage to the DUT when using a programming socket board. Do not use this pin for in-system programming.	Supplies the VDD voltage to the DUT when using a programming socket board. Do not use this pin for in-system programming.	Supplies the VDD voltage to the DUT when using a programming socket board. Do not use this pin for in-system programming.

SILICON LABS
400 W Cesar Chavez
Austin, TX 78701

Title: Voltage Regulators and Interface Connector

Size	Document Number	Rev
B	CBPROG-EB	1.0

Date: Tuesday, March 31, 2015 Sheet 3 of 4

REVISION HISTORY

Rev 1.0 - Jan 16, 2015, Initial Board Release
Travis Turner

400 W Cesar Chavez
Austin, TX 78701

Title	Revision History	
Size B	Document Number CBPROG-EB	Rev 1.0
Date: Friday, January 30, 2015	Sheet 4 of 4	