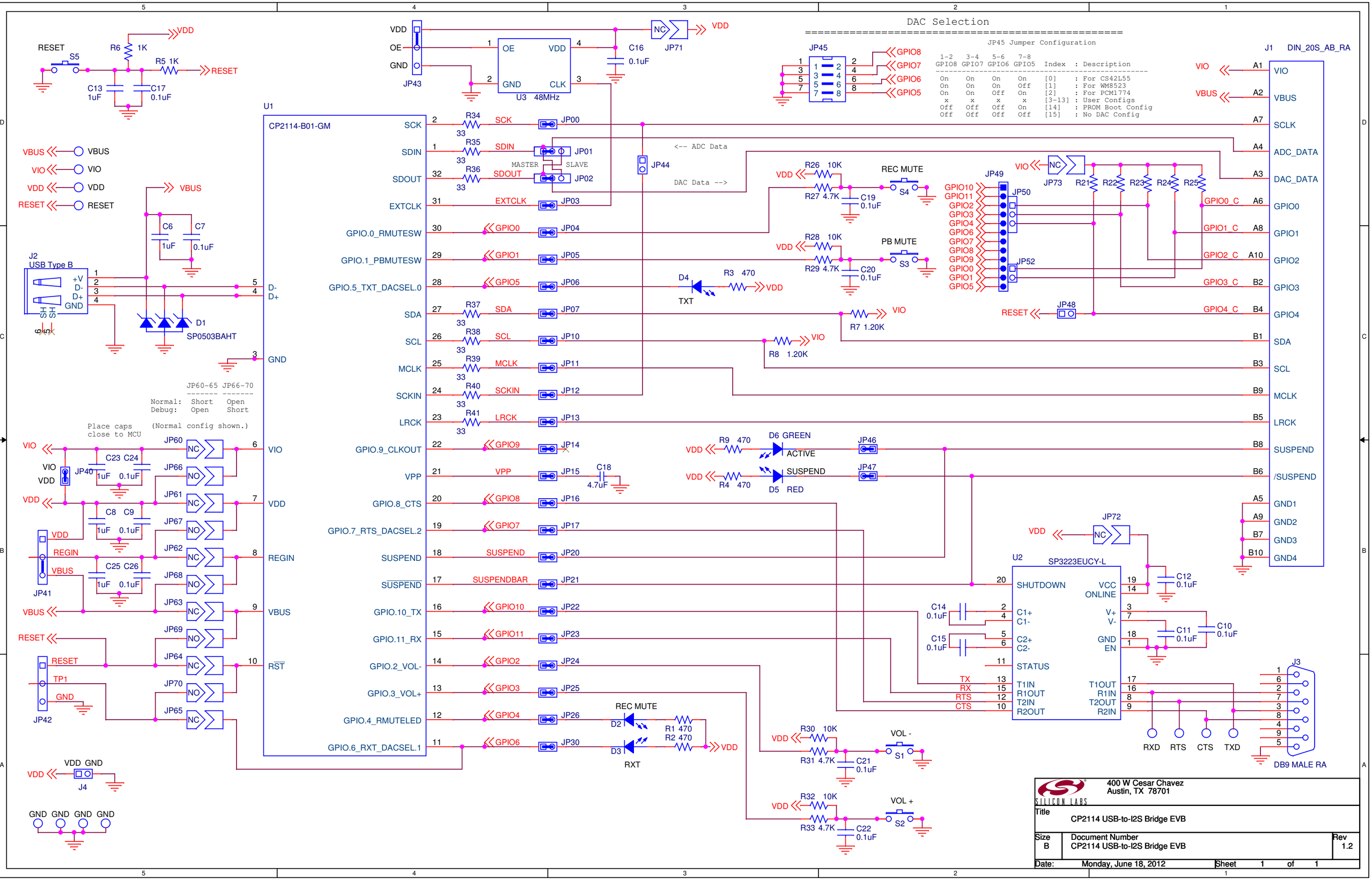
DAC Selection
JP45 Jumper Configuration
1-2 3-4 5-6 7-8
GPIO8 GPIO7 GPIO6 GPIO5 Index : Description
On On On On [0] : For CS42L55
On On On Off [1] : For WM8523
On On Off On [2] : For PCM1774
x x x x [3-13] : User Configs
Off Off Off On [14] : PROM Boot Config
Off Off Off Off [15] : No DAC Config
U1
CP2114-B01-GM
U2
SP3223EUCY-L
U3 48MHz
J1 DIN_20S_AB_RA
J2 USB Type B
J3 DB9 MALE RA
D1 SP0503BAHT
D4 TXT
D5 RED
D6 GREEN
ACTIVE
SUSPEND
REC MUTE
PB MUTE
VOL -
VOL +
<-- ADC Data
DAC Data -->
MASTER
SLAVE
JP60-65 JP66-70
Normal: Short Open
Debug: Open Short
Place caps close to MCU
(Normal config shown.)
400 W Cesar Chavez
Austin, TX 78701
SILICON LABS
Title
CP2114 USB-to-I2S Bridge EVB
Size B
Document Number
CP2114 USB-to-I2S Bridge EVB
Rev 1.2
Date: Monday, June 18, 2012
Sheet 1 of 1