BRD3302A - G890 MCU plugin

Board Function	Page
Front Page	1
EFM32 Microcontroller	2
EFM32 Power	3
LCD Panel	4
EFM32 Connectors	5
Signal Assignments #1	6
Signal Assignments #2	7
Misc Connections	8

Revision History

Rev.	Comment
A00	Initial release

<Schematic Path>
TOP

Schematic Title	BRD3302A - G890 MCU plugin
Page Title	Front Page
Designed: DDB	Approved: JNO
Size: A3	BOM Doc No: <Cage Code>
Document number	Revision: A01
Design Created Date: Wednesday, December 03, 2008	Sheet Created Date: Tuesday, February 17, 2009
Sheet Modified Date: Tuesday, November 22, 2011	Sheet 1 of 8

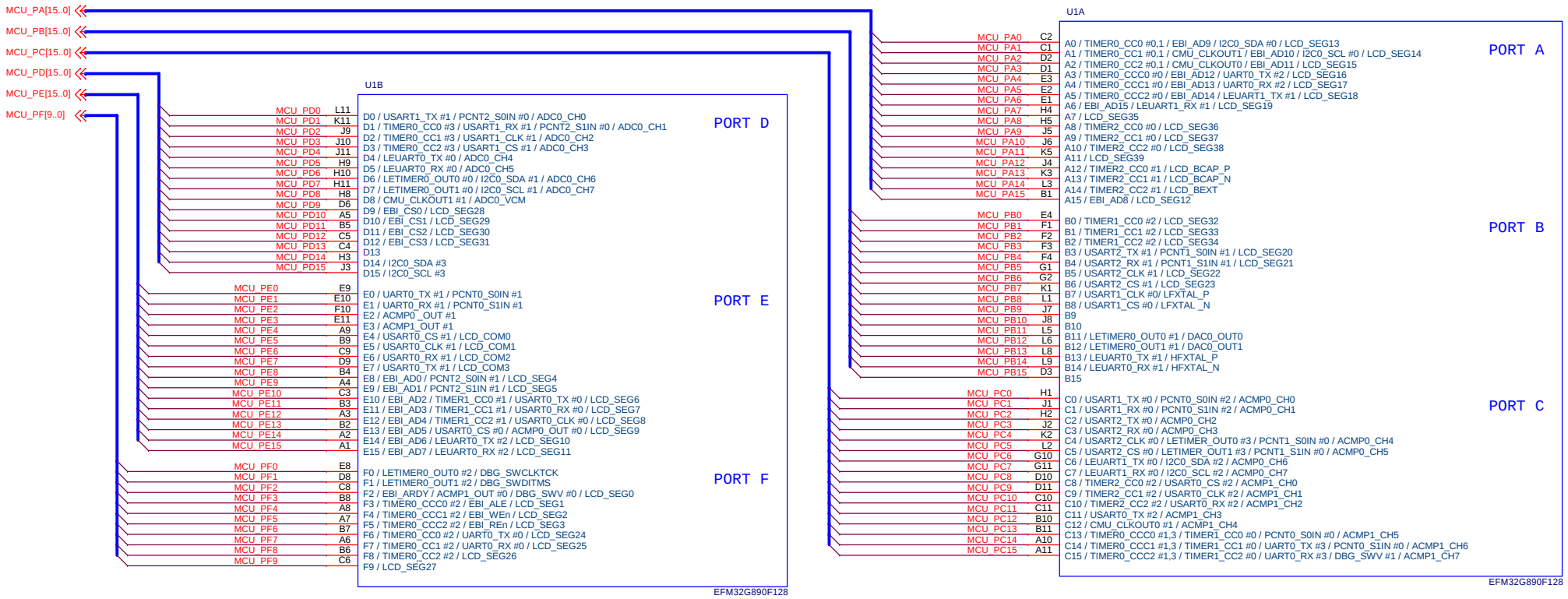

/
TOP

Schematic Title	BRD3302A - G890 MCU plugin
Page Title	MCU
Designed: DDB	Approved: JNO
Document number	Revision: A01
Size: A3	BOM Doc No: <Cage Code>
Design Created Date: Wednesday, December 03, 2008	Sheet Created Date: Tuesday, April 07, 2009
Sheet Modified Date: Tuesday, November 22, 2011	Sheet: 2 of 8

Reset Circuit

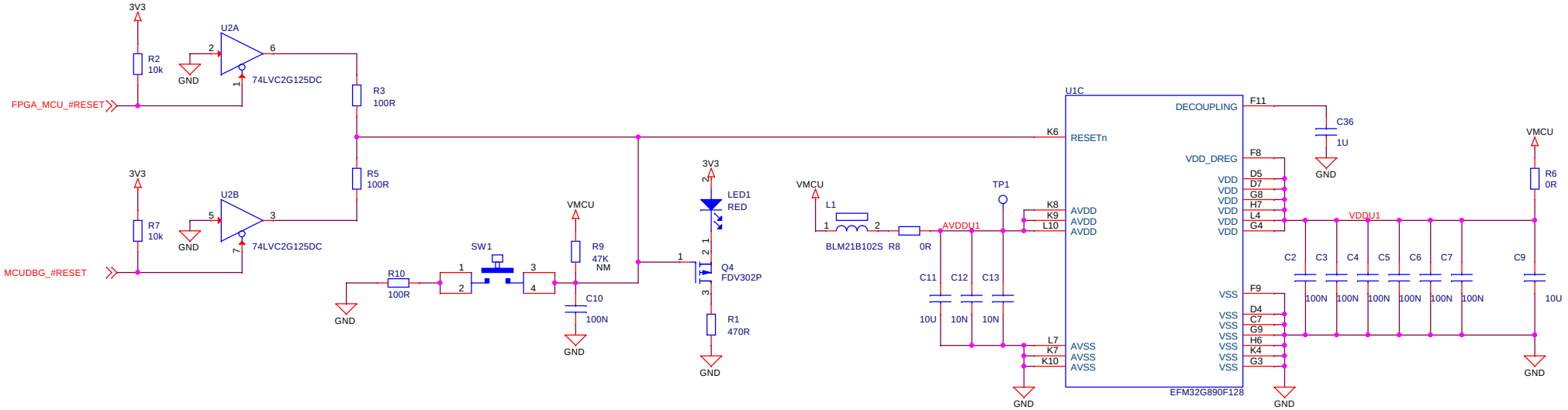

High Frequency Clock

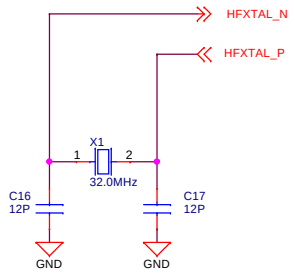

Low Frequency Clock

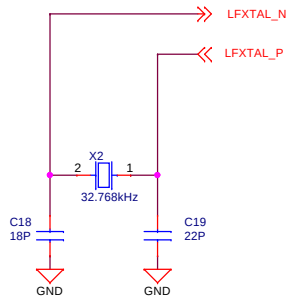

Decoupling

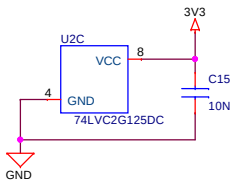

<Schematic Path>
TOP

Schematic Title	BRD3302A - G890 MCU plugin
Page Title	EFM32 Power
Designed: DDB	Approved: JNO
Size: A3	BOM Doc No: <Cage Code>
Document number	Revision: A01
Design Created Date: Wednesday, December 03, 2008	Sheet Created Date: Wednesday, July 15, 2009
Sheet Modified Date: Tuesday, November 22, 2011	Sheet 3 of 8

LCD signal connections

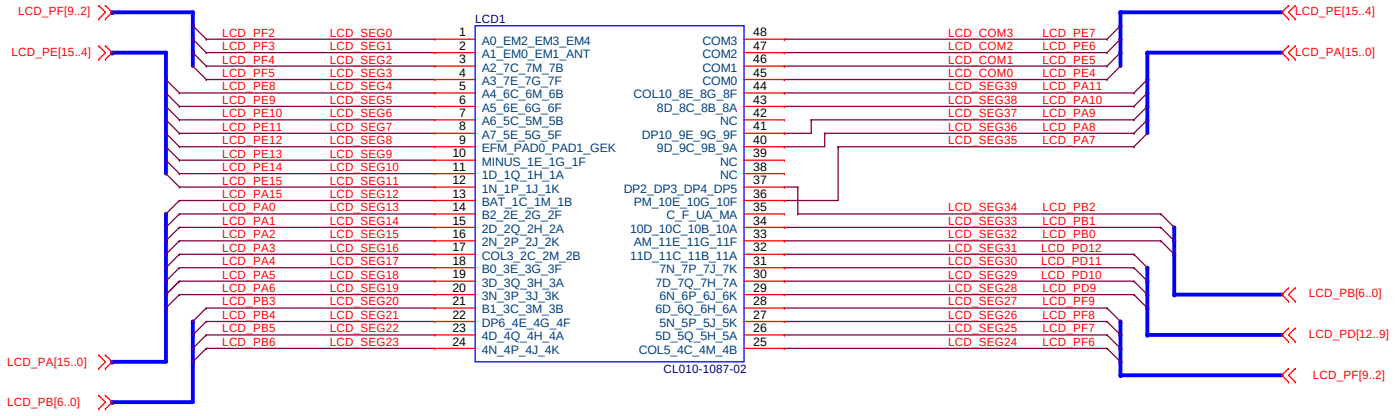

Segment names

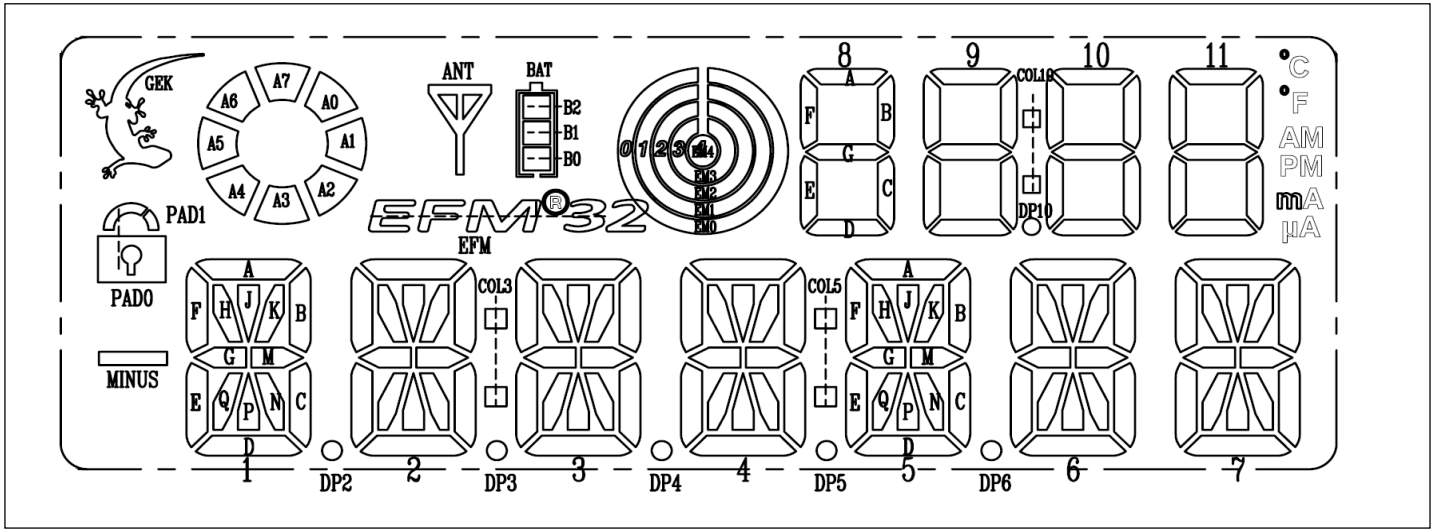

<Schematic Path>
TOP

Schematic Title	**BRD3302A - G890 MCU plugin**
Page Title	**LCD panel**
Designed: DDB	Approved: JNO
Size A3	BOM Doc No: <Cage Code>
Document number	Revision A01
Design Created Date: Wednesday, December 03, 2008	Sheet Created Date: Tuesday, July 14, 2009
Sheet Modified Date: Tuesday, November 22, 2011	Sheet 4 of 8

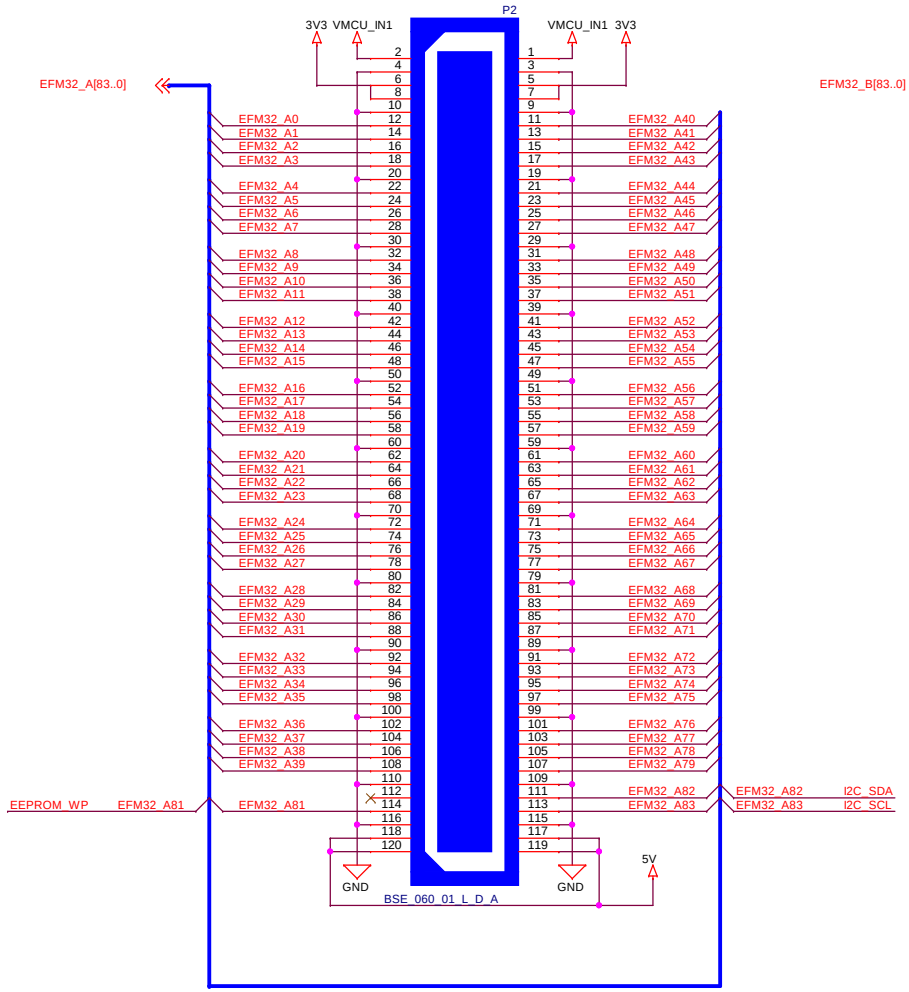

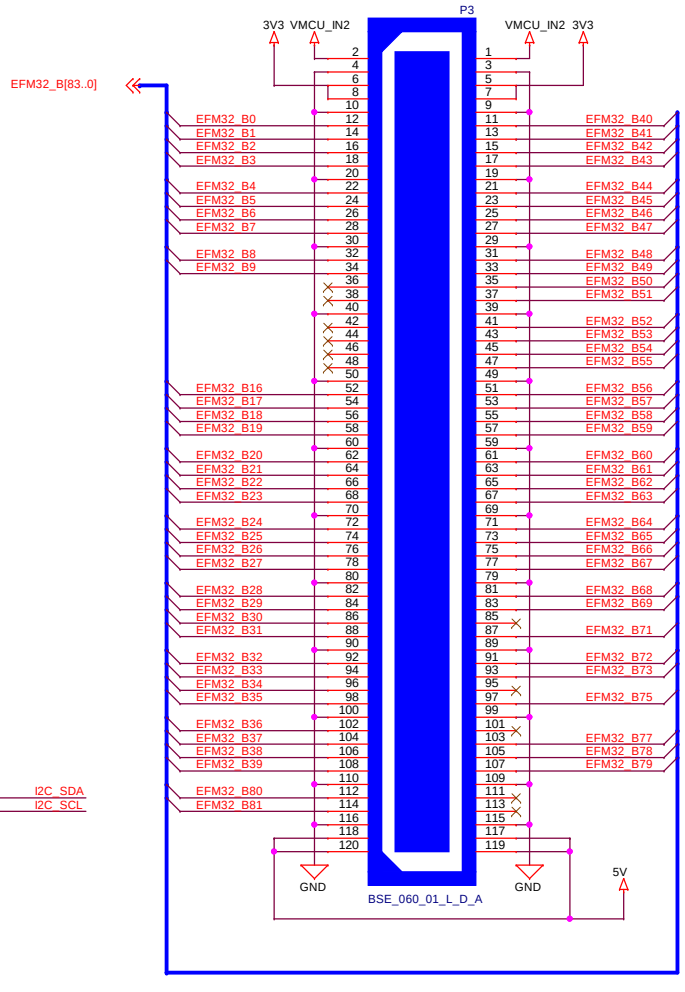

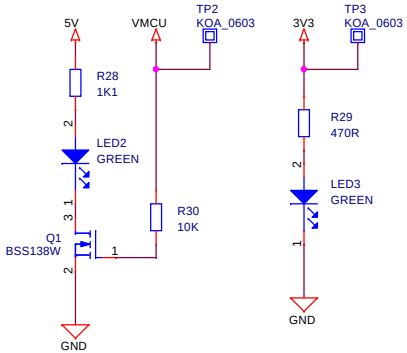

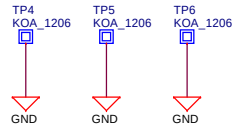

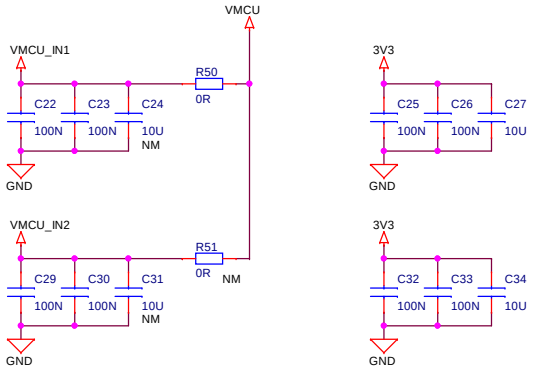

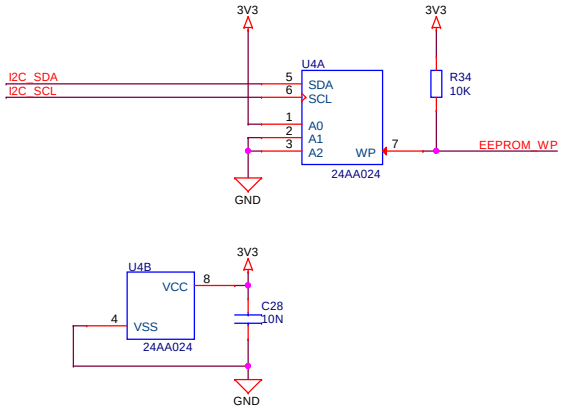

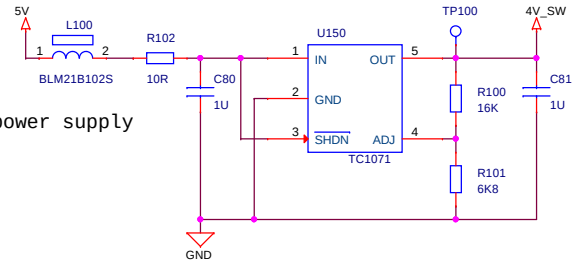

LCD-Switches power supply

<Schematic Path>
TOP

Schematic Title	**BRD3302A - G890 MCU plugin**
Page Title	**EFM32 Connectors**
Designed: DDB	Approved: JNO
Size: A3	BOM Doc No: <Cage Code>
Document number	Revision: A01
Design Created Date: Wednesday, December 03, 2008	Sheet Created Date: Monday, March 16, 2009
Sheet Modified Date: Tuesday, November 22, 2011	Sheet: 5 of 8

PA Connections

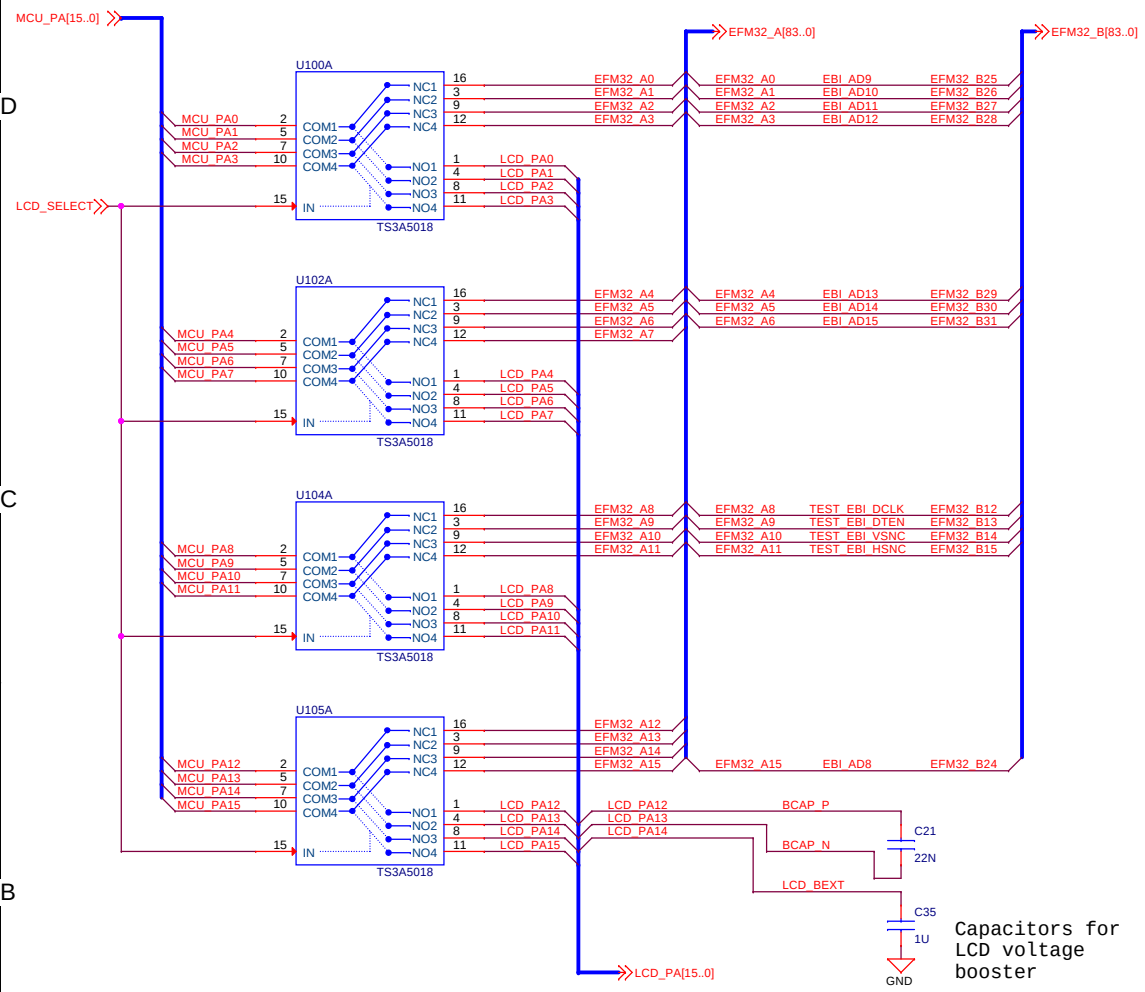

Capacitors for LCD voltage booster

LCD Switch power

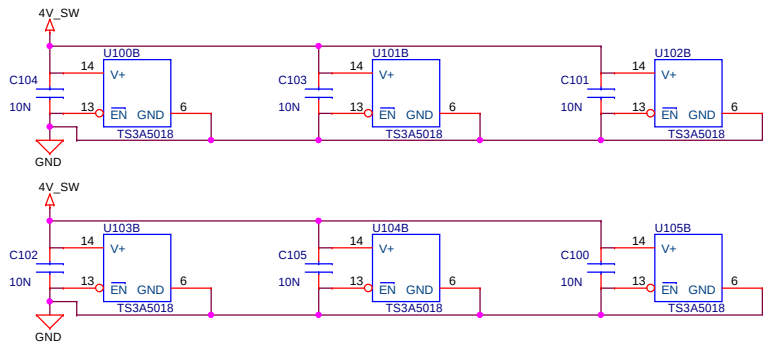

PB Connections

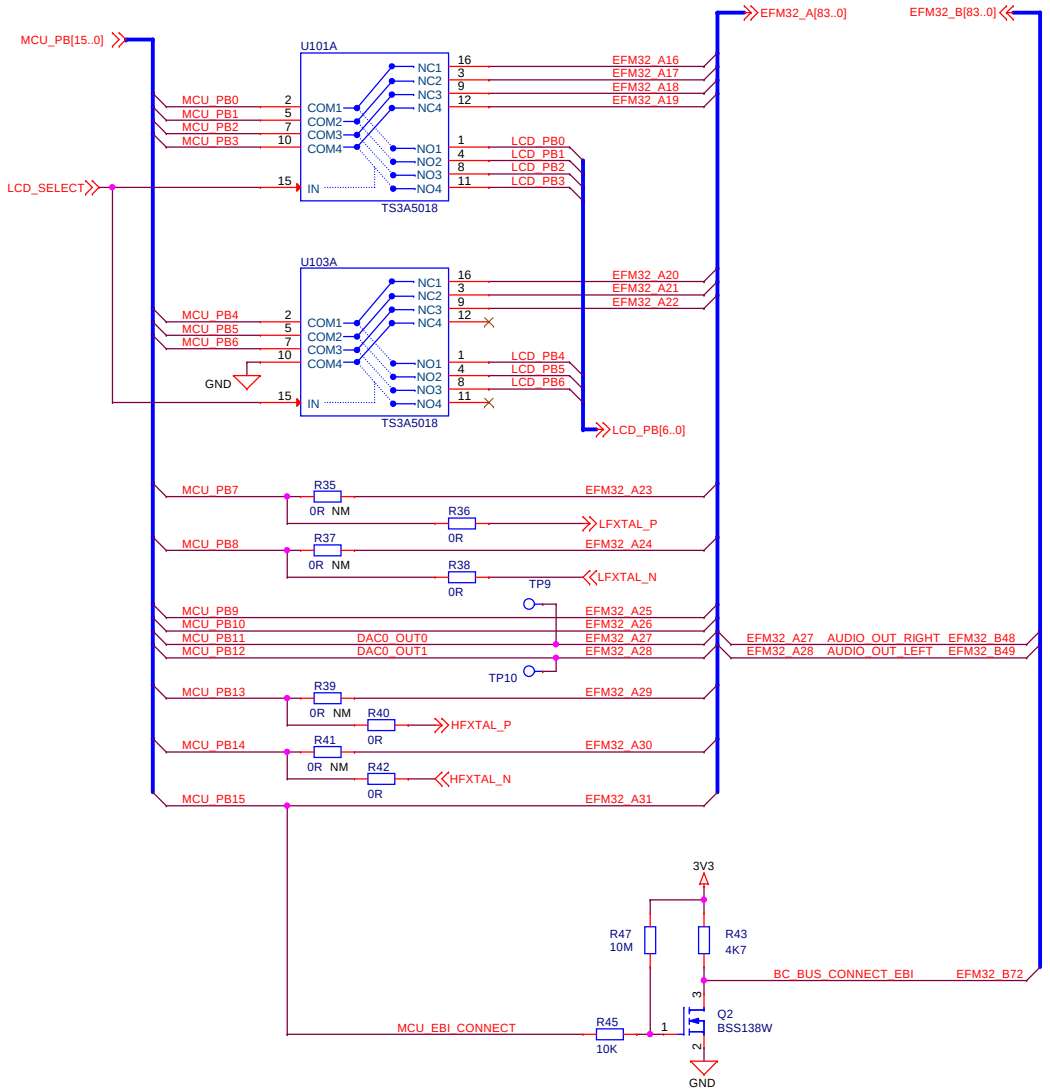

EBI Connect Switch

<Schematic Path>
TOP

Schematic Title	BRD3302A - G890 MCU plugin
Page Title	Signal Assignments #1
Designed: AG	Approved: JNO
Size: A3	BOM Doc No: <Cage Code>
Document number	Revision: A01
Design Created Date: Wednesday, December 03, 2008	Sheet Created Date: Monday, August 03, 2009
Sheet Modified Date: Tuesday, November 22, 2011	Sheet 6 of 8

PC Connections

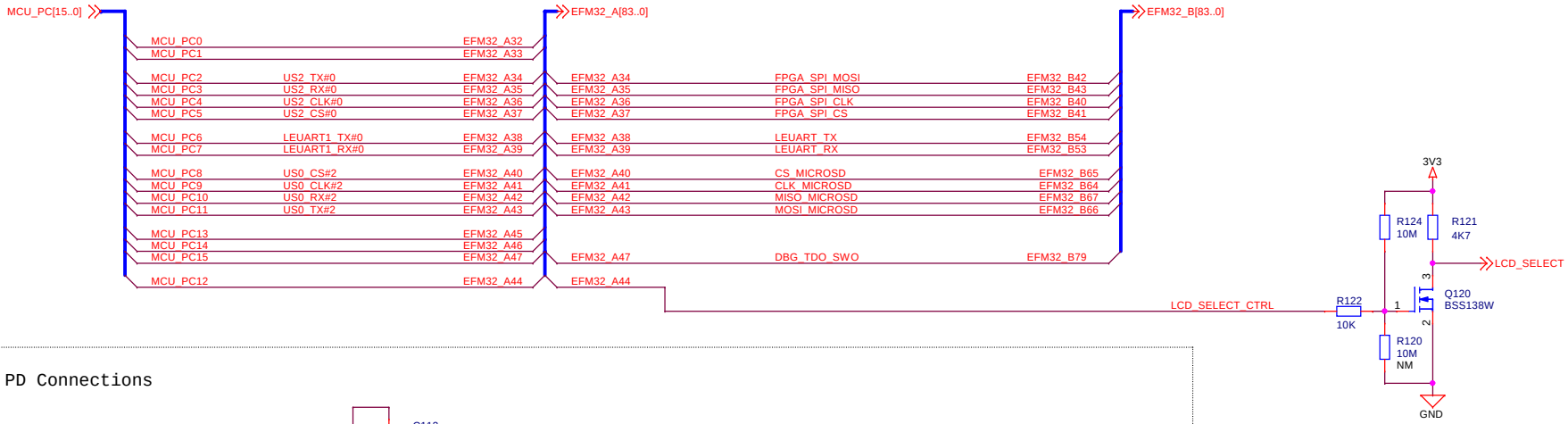

LCD Switch controll

PD Connections

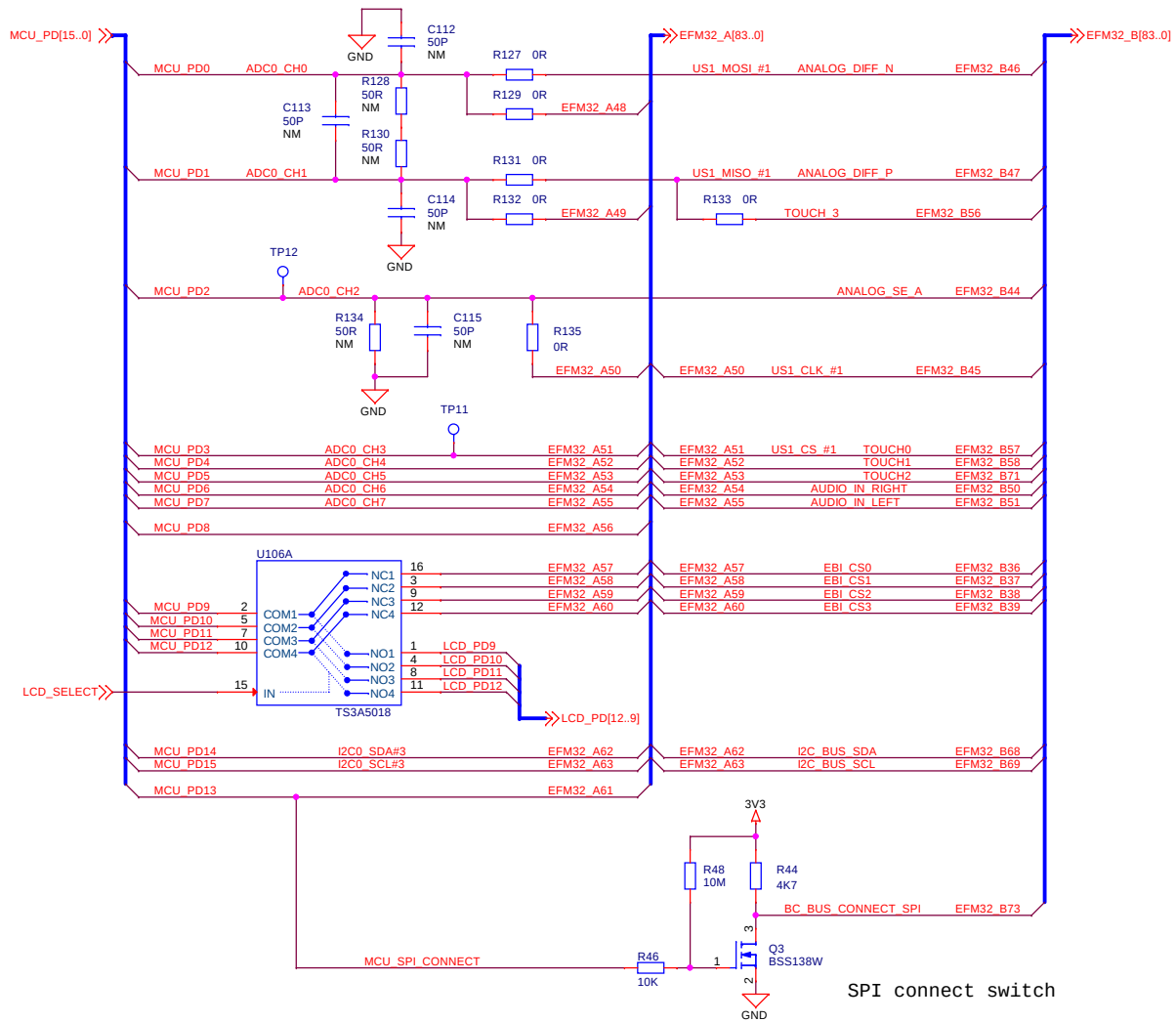

SPI connect switch

Switch power

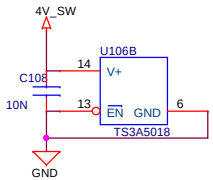

<Schematic Path>
TOP

Schematic Title	BRD3302A - G890 MCU plugin		
Page Title	Signal Assignments #2		
Designed: DDB	Approved: JNO	Document number	Revision A01
Size A3	BOM Doc No: <Cage Code>		
Design Created Date: Wednesday, December 03, 2008	Sheet Created Date Tuesday, August 04, 2009	Sheet Modified Date Tuesday, November 22, 2011	Sheet 7 of 8

PE Connections

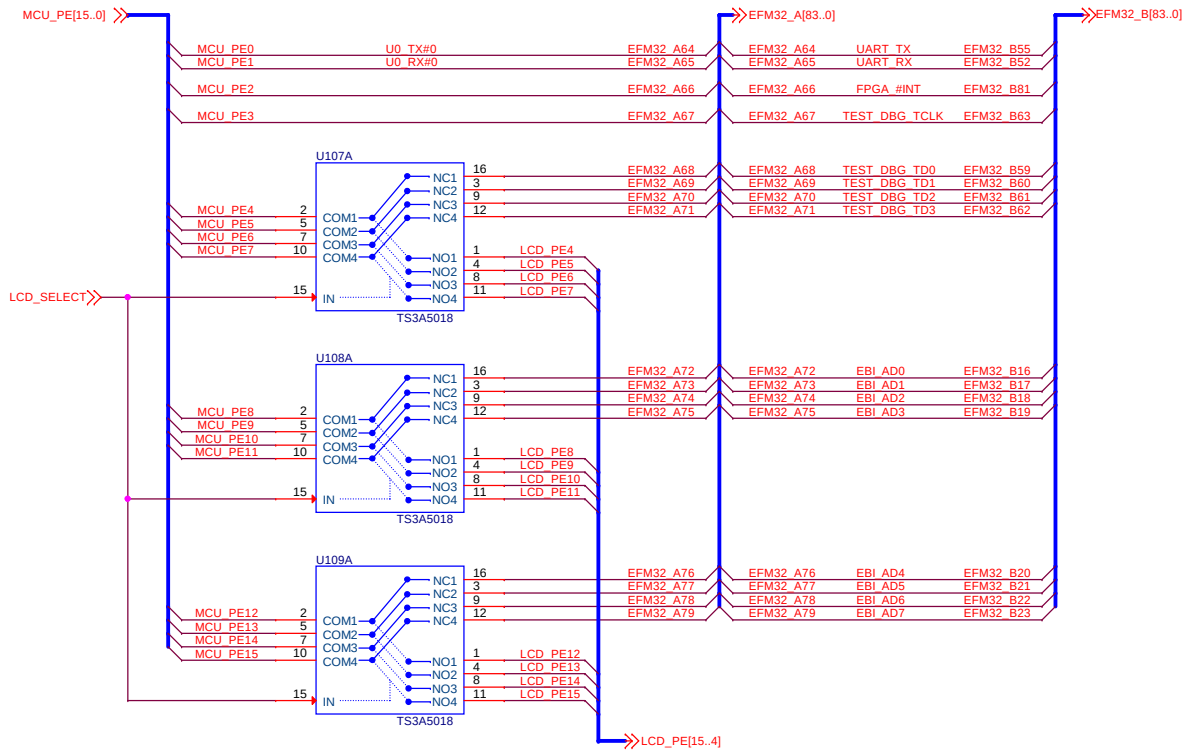

Reset connections

PF Connections

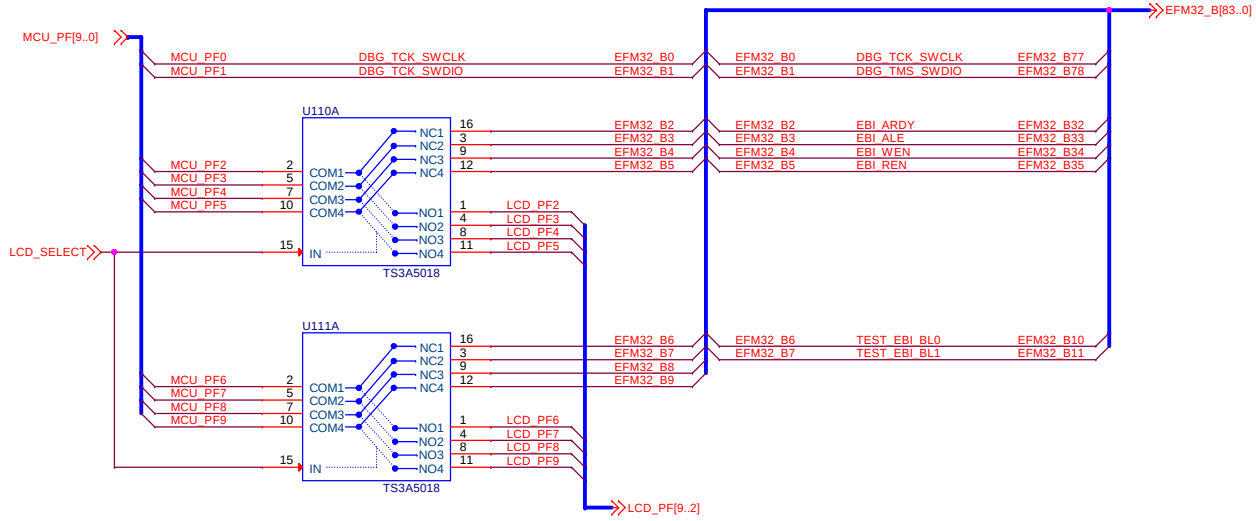

Switch power

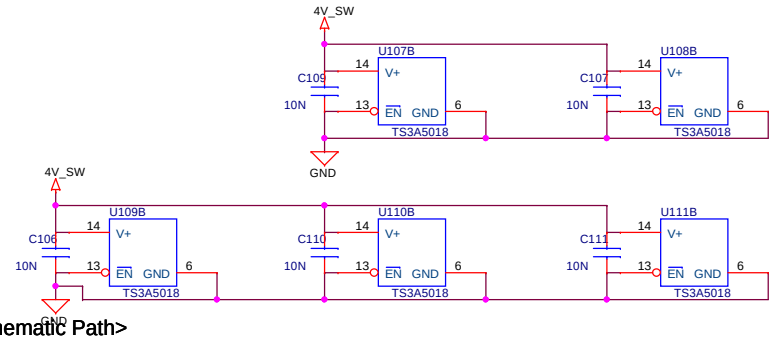

<Schematic Path>
TOP

Schematic Title	BRD3302A - G890 MCU plugin		
Page Title	Misc Connections		
Designed: DDB	Approved: JNO		
Size A3	BOM Doc No: <Cage Code>	Document number BRD3302A	Revision A01
Design Created Date: Wednesday, December 03, 2008	Sheet Created Date Tuesday, October 11, 2011	Sheet Modified Date Tuesday, November 22, 2011	Sheet 8 of 8