BRD3600A - GG990 MCU plugin

Board Function	Page
Front Page	1
EFM32 Microcontroller	2
EFM32 Power	3
EFM32 Connectors	4
Signal Assignments #1	5
Signal Assignments #2	6
Misc Connections	7

Revision History

Rev.	Description
A00	Initial release
A01	Swapped pin 4 and 6 on D2
A02	Changed USB resistors to 15 ohm SWO: R136 to be mounted
A03	Minor changes allover New PCB revision
A04	Tuned HFXO and LFXO capacitors
A05	Updated EFM32 to Giant Gecko Rev.D Changed switch voltage to 3.6V

PCB1

PCB3600

TOP

Schematic Title	BRD3600A - GG990 MCU plugin
Page Title	Front Page
Designed: AG	Approved: JNO
Size: A3	BOM Doc No: <Cage Code>
Document number	BRD3600A
Revision	A05
Design Created Date:	Wednesday, December 03, 2008
Sheet Created Date	Tuesday, February 17, 2009
Sheet Modified Date	Wednesday, April 25, 2012
Sheet	1 of 7

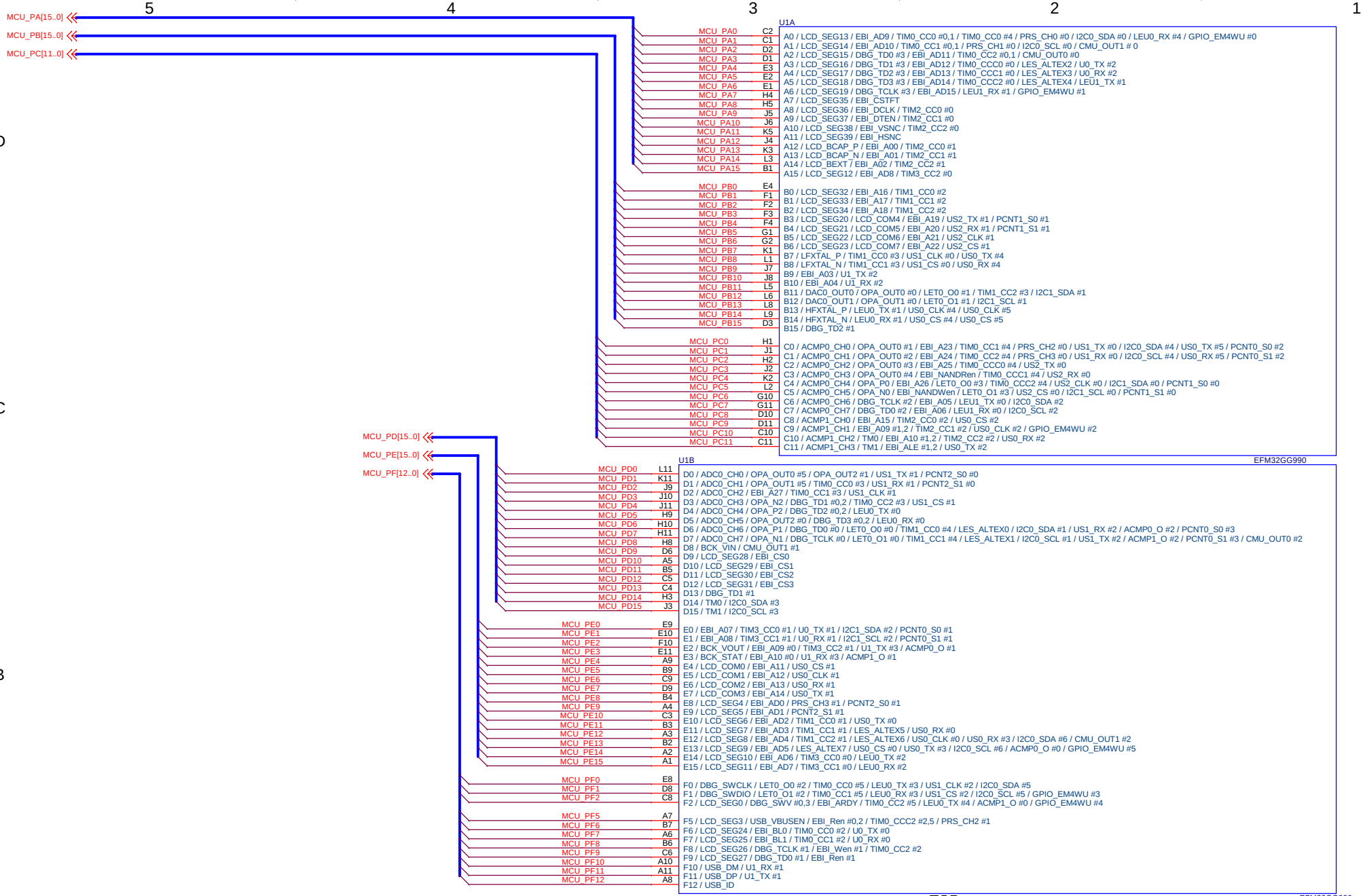

Schematic Title: **BRD3600A - GG990 MCU plugin**			
Page Title: **EFM32 I/O**			
Designed: AG	Approved: JNO	Document number: **BRD3600A**	Revision: A05
Size: A3	BOM Doc No: <Cage Code>		
Design Created Date: Wednesday, December 03, 2008	Sheet Created Date: Tuesday, April 07, 2009	Sheet Modified Date: Wednesday, April 25, 2012	Sheet 2 of 7

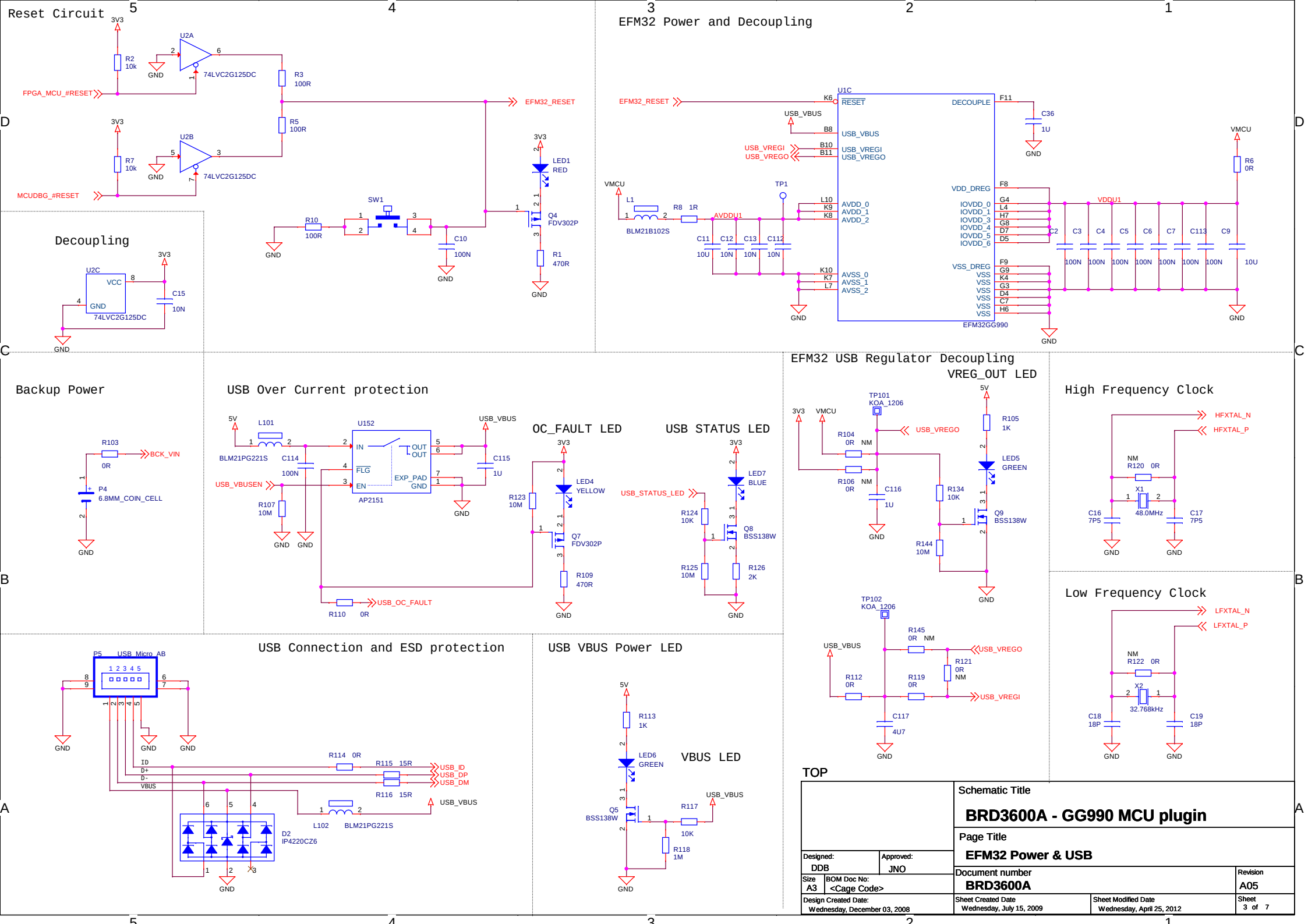
Reset Circuit
EFM32 Power and Decoupling
Decoupling
Backup Power
USB Over Current protection
OC_FAULT LED
USB STATUS LED
EFM32 USB Regulator Decoupling
VREG_OUT LED
High Frequency Clock
Low Frequency Clock
USB Connection and ESD protection
USB VBUS Power LED
VBUS LED
TOP
FPGA_MCU_#RESET
MCUDBG_#RESET
EFM32_RESET
U2A
U2B
U2C
74LVC2G125DC
R2 10k
R7 10k
R3 100R
R5 100R
R10 100R
SW1
C10 100N
LED1 RED
Q4 FDV302P
R1 470R
U1C
EFM32GG990
RESET
DECOUPLE
USB_VBUS
USB_VREGI
USB_VREGO
VDD_DREG
VSS_DREG
AVDD_0
AVDD_1
AVDD_2
AVSS_0
AVSS_1
AVSS_2
IOVDD_0
IOVDD_1
IOVDD_3
IOVDD_4
IOVDD_5
IOVDD_6
VSS
C36 1U
R6 0R
VMCU
VDDU1
AVDDU1
L1 BLM21B102S
R8 1R
TP1
C11 10U
C12 10N
C13 10N
C112 10N
C2 C3 C4 C5 C6 C7 C113 C9
100N
10U
R103 0R
BCK_VIN
P4 6.8MM_COIN_CELL
L101 BLM21PG221S
C114 100N
U152 AP2151
IN
OUT
FLG
EN
EXP_PAD
GND
USB_VBUSEN
R107 10M
C115 1U
R123 10M
LED4 YELLOW
Q7 FDV302P
R109 470R
R110 0R
USB_OC_FAULT
USB_STATUS_LED
LED7 BLUE
R124 10K
Q8 BSS138W
R125 10M
R126 2K
TP101 KOA_1206
TP102 KOA_1206
R104 0R NM
R106 0R NM
C116 1U
R105 1K
LED5 GREEN
R134 10K
Q9 BSS138W
R144 10M
R145 0R NM
R121 0R NM
R112 0R
R119 0R
C117 4U7
HFXTAL_N
HFXTAL_P
NM R120 0R
X1 48.0MHz
C16 7P5
C17 7P5
LFXTAL_N
LFXTAL_P
NM R122 0R
X2 32.768kHz
C18 18P
C19 18P
P5 USB_Micro_AB
ID
D+
D-
VBUS
R114 0R
R115 15R
R116 15R
USB_ID
USB_DP
USB_DM
L102 BLM21PG221S
D2 IP4220CZ6
LED6 GREEN
Q5 BSS138W
R113 1K
R117 10K
R118 1M
Schematic Title
BRD3600A - GG990 MCU plugin
Page Title
EFM32 Power & USB
Designed: DDB
Approved: JNO
Size A3
BOM Doc No: <Cage Code>
Document number BRD3600A
Revision A05
Design Created Date: Wednesday, December 03, 2008
Sheet Created Date Wednesday, July 15, 2009
Sheet Modified Date Wednesday, April 25, 2012
Sheet 3 of 7

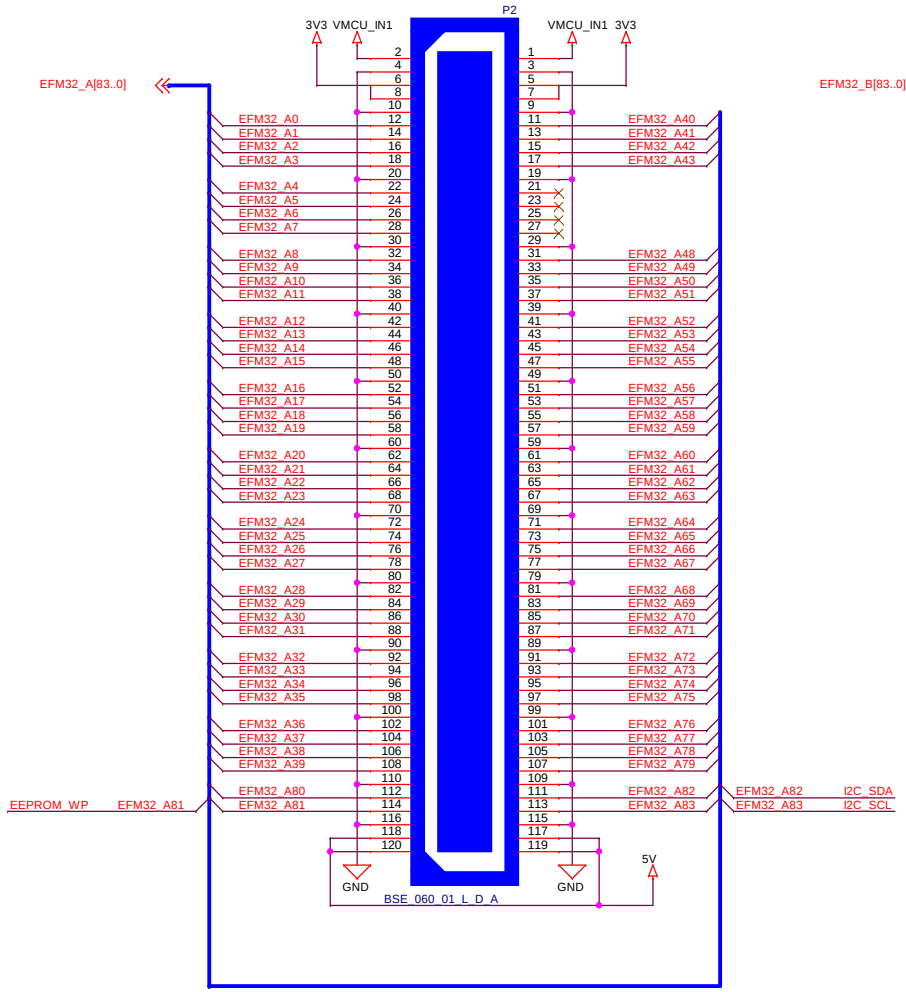

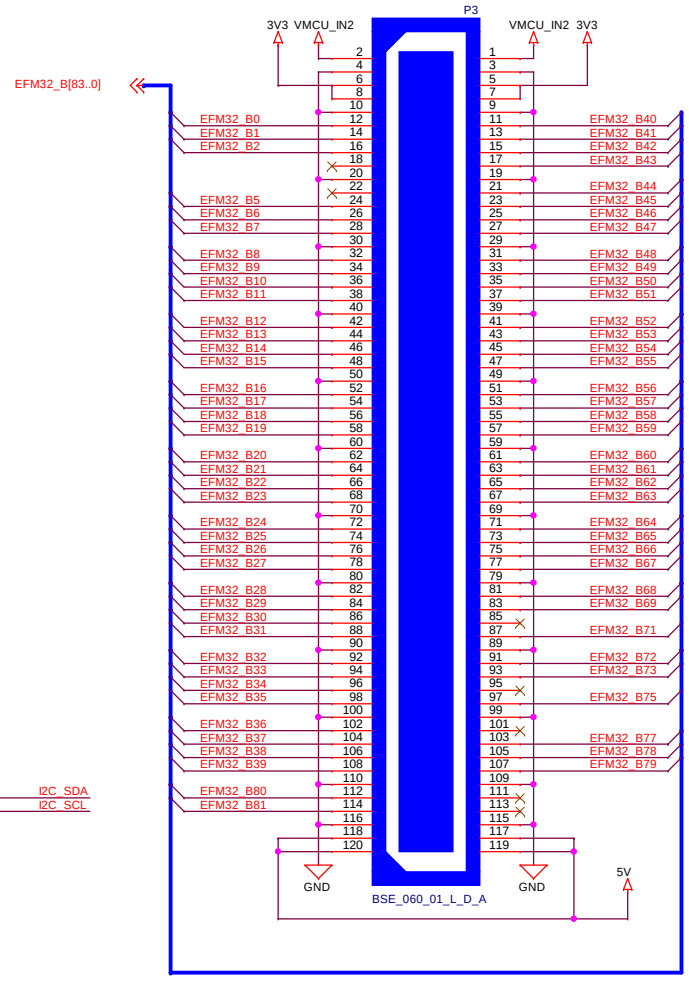

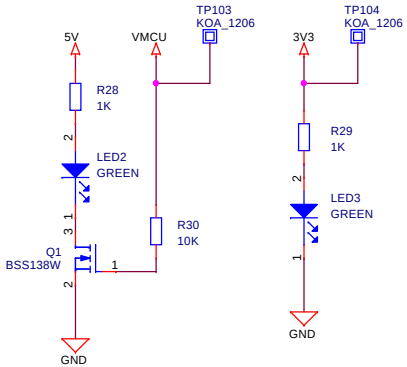

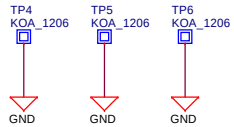

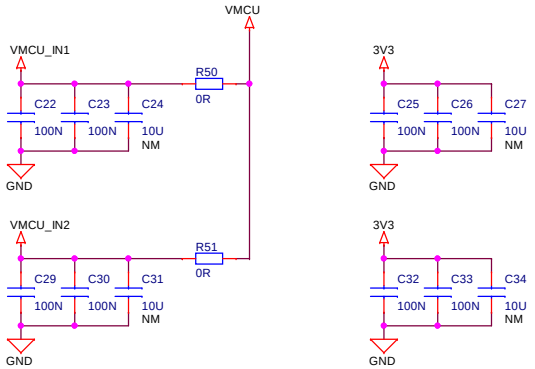

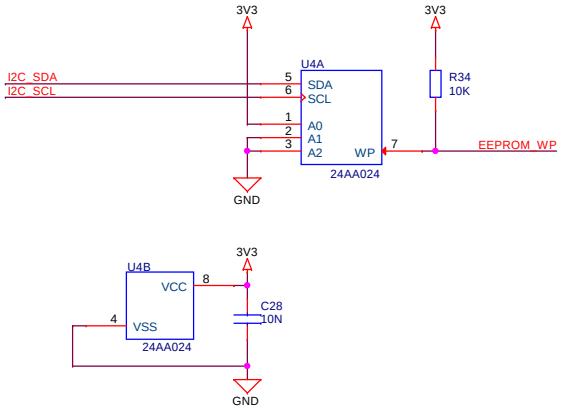

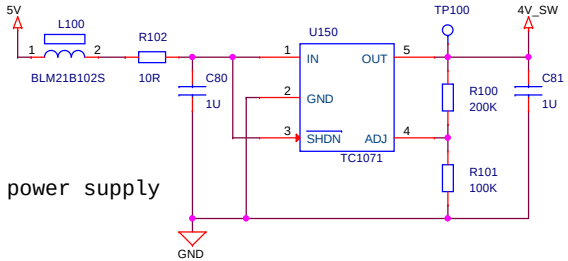

EBI/TFT Switches power supply

TOP

Schematic Title	**BRD3600A - GG990 MCU plugin**	
Page Title	**EFM32 Connectors**	
Designed: AG	Approved: JNO	Document number **BRD3600A**
Revision A05	Size A3	BOM Doc No: <Cage Code>
Design Created Date: Wednesday, December 03, 2008	Sheet Created Date Monday, March 16, 2009	Sheet Modified Date Wednesday, April 25, 2012
Sheet 4 of 7		

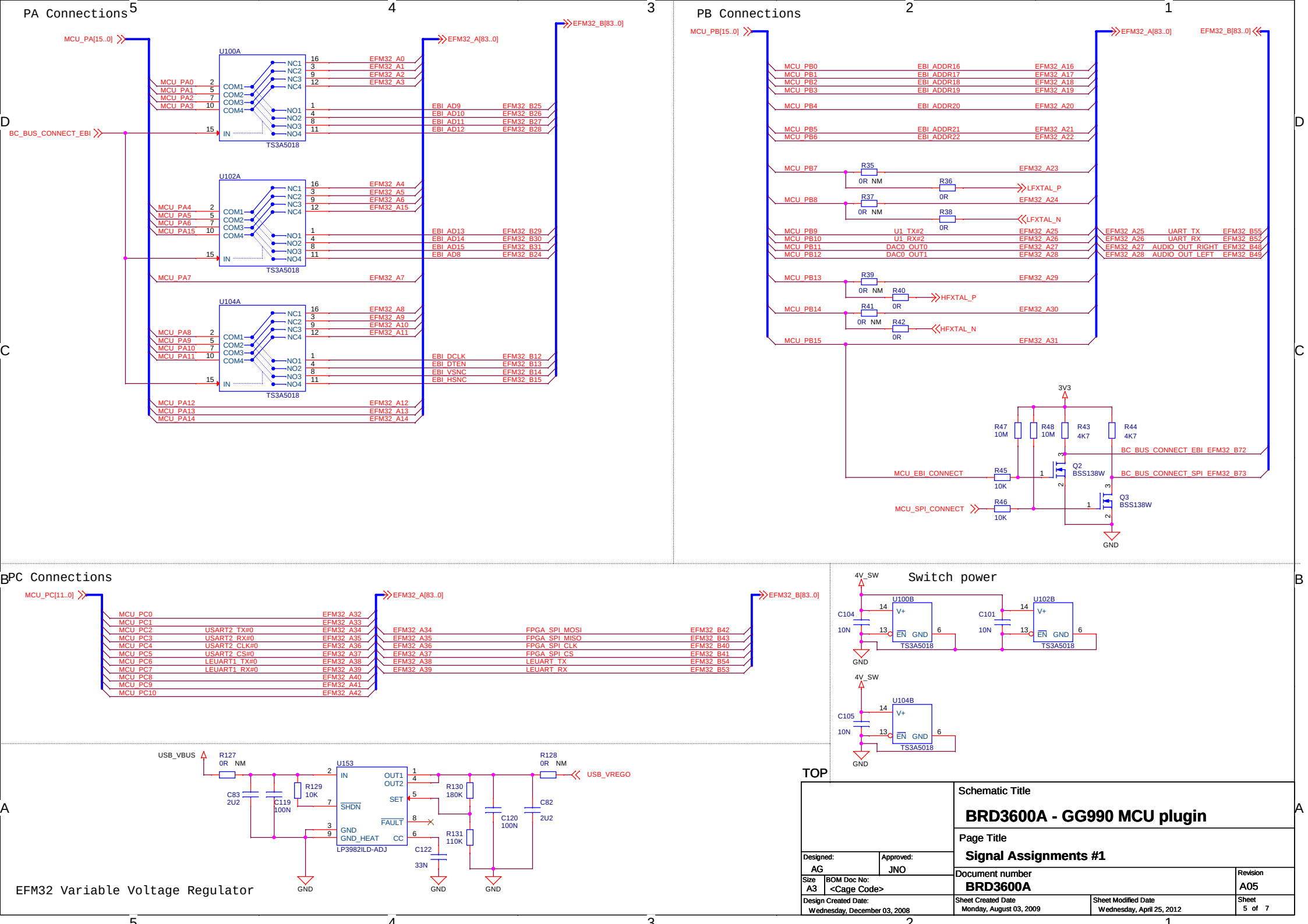
PA Connections
PB Connections
PC Connections
Switch power
EFM32 Variable Voltage Regulator
MCU_PA[15..0]
EFM32_A[83..0]
EFM32_B[83..0]
BC_BUS_CONNECT_EBI
U100A
U102A
U104A
TS3A5018
MCU_PA0
MCU_PA1
MCU_PA2
MCU_PA3
MCU_PA4
MCU_PA5
MCU_PA6
MCU_PA15
MCU_PA7
MCU_PA8
MCU_PA9
MCU_PA10
MCU_PA11
MCU_PA12
MCU_PA13
MCU_PA14
EFM32_A0
EFM32_A1
EFM32_A2
EFM32_A3
EFM32_A4
EFM32_A5
EFM32_A6
EFM32_A15
EFM32_A7
EFM32_A8
EFM32_A9
EFM32_A10
EFM32_A11
EFM32_A12
EFM32_A13
EFM32_A14
EBI_AD9
EBI_AD10
EBI_AD11
EBI_AD12
EBI_AD13
EBI_AD14
EBI_AD15
EBI_AD8
EBI_DCLK
EBI_DTEN
EBI_VSNC
EBI_HSNC
EFM32_B25
EFM32_B26
EFM32_B27
EFM32_B28
EFM32_B29
EFM32_B30
EFM32_B31
EFM32_B24
EFM32_B12
EFM32_B13
EFM32_B14
EFM32_B15
MCU_PB[15..0]
MCU_PB0
MCU_PB1
MCU_PB2
MCU_PB3
MCU_PB4
MCU_PB5
MCU_PB6
MCU_PB7
MCU_PB8
MCU_PB9
MCU_PB10
MCU_PB11
MCU_PB12
MCU_PB13
MCU_PB14
MCU_PB15
EBI_ADDR16
EBI_ADDR17
EBI_ADDR18
EBI_ADDR19
EBI_ADDR20
EBI_ADDR21
EBI_ADDR22
EFM32_A16
EFM32_A17
EFM32_A18
EFM32_A19
EFM32_A20
EFM32_A21
EFM32_A22
EFM32_A23
EFM32_A24
EFM32_A25
EFM32_A26
EFM32_A27
EFM32_A28
EFM32_A29
EFM32_A30
EFM32_A31
U1_TX#2
U1_RX#2
DAC0_OUT0
DAC0_OUT1
UART_TX
UART_RX
AUDIO_OUT_RIGHT
AUDIO_OUT_LEFT
EFM32_B55
EFM32_B52
EFM32_B48
EFM32_B49
R35
R36
R37
R38
R39
R40
R41
R42
0R NM
0R
LFXTAL_P
LFXTAL_N
HFXTAL_P
HFXTAL_N
3V3
R47 10M
R48 10M
R43 4K7
R44 4K7
R45 10K
R46 10K
Q2 BSS138W
Q3 BSS138W
MCU_EBI_CONNECT
MCU_SPI_CONNECT
BC_BUS_CONNECT_EBI_EFM32_B72
BC_BUS_CONNECT_SPI_EFM32_B73
GND
MCU_PC[11..0]
MCU_PC0
MCU_PC1
MCU_PC2
MCU_PC3
MCU_PC4
MCU_PC5
MCU_PC6
MCU_PC7
MCU_PC8
MCU_PC9
MCU_PC10
USART2_TX#0
USART2_RX#0
USART2_CLK#0
USART2_CS#0
LEUART1_TX#0
LEUART1_RX#0
EFM32_A32
EFM32_A33
EFM32_A34
EFM32_A35
EFM32_A36
EFM32_A37
EFM32_A38
EFM32_A39
EFM32_A40
EFM32_A41
EFM32_A42
FPGA_SPI_MOSI
FPGA_SPI_MISO
FPGA_SPI_CLK
FPGA_SPI_CS
LEUART_TX
LEUART_RX
EFM32_B42
EFM32_B43
EFM32_B40
EFM32_B41
EFM32_B54
EFM32_B53
4V_SW
U100B
U102B
U104B
C104 10N
C101 10N
C105 10N
V+
EN
GND
USB_VBUS
R127 0R NM
R128 0R NM
U153
LP3982ILD-ADJ
IN
OUT1
OUT2
SET
SHDN
FAULT
GND_HEAT
CC
R129 10K
R130 180K
R131 110K
C83 2U2
C119 100N
C120 100N
C82 2U2
C122 33N
USB_VREGO
TOP
Schematic Title
BRD3600A - GG990 MCU plugin
Page Title
Signal Assignments #1
Designed: AG
Approved: JNO
Size A3
BOM Doc No: <Cage Code>
Document number BRD3600A
Revision A05
Design Created Date: Wednesday, December 03, 2008
Sheet Created Date Monday, August 03, 2009
Sheet Modified Date Wednesday, April 25, 2012
Sheet 5 of 7

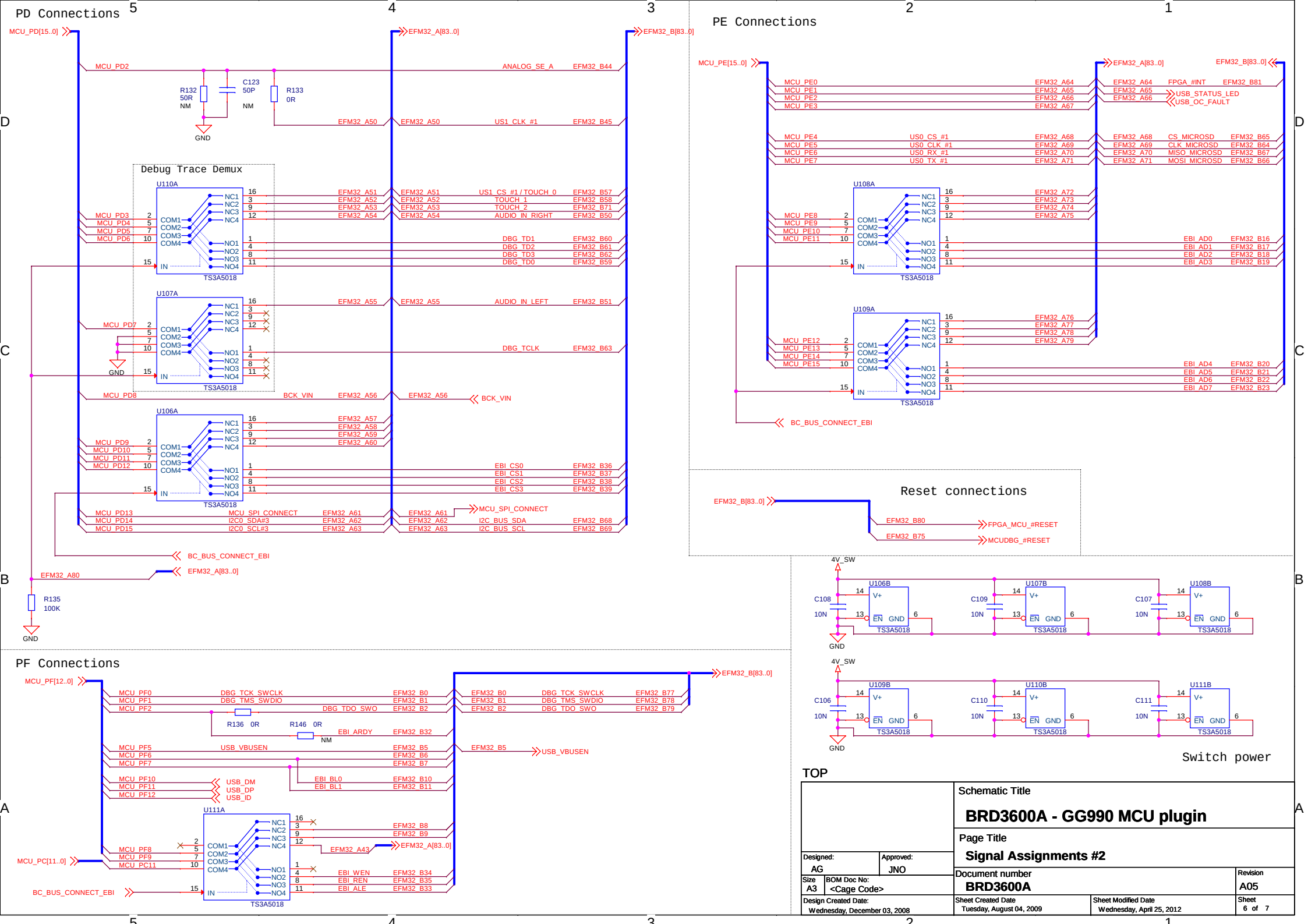
PD Connections
PE Connections
PF Connections
Debug Trace Demux
Reset connections
Switch power
TOP
MCU_PD[15..0]
EFM32_A[83..0]
EFM32_B[83..0]
MCU_PE[15..0]
MCU_PF[12..0]
MCU_PC[11..0]
U110A
U107A
U106A
U108A
U109A
U106B
U107B
U108B
U109B
U110B
U111B
U111A
TS3A5018
R132 50R NM
C123 50P NM
R133 0R
R135 100K
R136 0R
R146 0R NM
C108 10N
C109 10N
C107 10N
C106 10N
C110 10N
C111 10N
4V_SW
GND
MCU_PD2
ANALOG_SE_A
EFM32_B44
EFM32_A50
US1_CLK_#1
EFM32_B45
MCU_PD3
MCU_PD4
MCU_PD5
MCU_PD6
EFM32_A51
EFM32_A52
EFM32_A53
EFM32_A54
US1_CS_#1 / TOUCH_0
TOUCH_1
TOUCH_2
AUDIO_IN_RIGHT
EFM32_B57
EFM32_B58
EFM32_B71
EFM32_B50
DBG_TD1
DBG_TD2
DBG_TD3
DBG_TD0
EFM32_B60
EFM32_B61
EFM32_B62
EFM32_B59
MCU_PD7
EFM32_A55
AUDIO_IN_LEFT
EFM32_B51
DBG_TCLK
EFM32_B63
MCU_PD8
BCK_VIN
EFM32_A56
MCU_PD9
MCU_PD10
MCU_PD11
MCU_PD12
EFM32_A57
EFM32_A58
EFM32_A59
EFM32_A60
EBI_CS0
EBI_CS1
EBI_CS2
EBI_CS3
EFM32_B36
EFM32_B37
EFM32_B38
EFM32_B39
MCU_PD13
MCU_PD14
MCU_PD15
MCU_SPI_CONNECT
I2C0_SDA#3
I2C0_SCL#3
EFM32_A61
EFM32_A62
EFM32_A63
I2C_BUS_SDA
I2C_BUS_SCL
EFM32_B68
EFM32_B69
BC_BUS_CONNECT_EBI
EFM32_A80
MCU_PE0
MCU_PE1
MCU_PE2
MCU_PE3
EFM32_A64
EFM32_A65
EFM32_A66
EFM32_A67
FPGA_#INT
EFM32_B81
USB_STATUS_LED
USB_OC_FAULT
MCU_PE4
MCU_PE5
MCU_PE6
MCU_PE7
US0_CS_#1
US0_CLK_#1
US0_RX_#1
US0_TX_#1
EFM32_A68
EFM32_A69
EFM32_A70
EFM32_A71
CS_MICROSD
CLK_MICROSD
MISO_MICROSD
MOSI_MICROSD
EFM32_B65
EFM32_B64
EFM32_B67
EFM32_B66
MCU_PE8
MCU_PE9
MCU_PE10
MCU_PE11
EFM32_A72
EFM32_A73
EFM32_A74
EFM32_A75
EBI_AD0
EBI_AD1
EBI_AD2
EBI_AD3
EFM32_B16
EFM32_B17
EFM32_B18
EFM32_B19
MCU_PE12
MCU_PE13
MCU_PE14
MCU_PE15
EFM32_A76
EFM32_A77
EFM32_A78
EFM32_A79
EBI_AD4
EBI_AD5
EBI_AD6
EBI_AD7
EFM32_B20
EFM32_B21
EFM32_B22
EFM32_B23
EFM32_B80
EFM32_B75
FPGA_MCU_#RESET
MCUDBG_#RESET
MCU_PF0
MCU_PF1
MCU_PF2
DBG_TCK_SWCLK
DBG_TMS_SWDIO
DBG_TDO_SWO
EFM32_B0
EFM32_B1
EFM32_B2
EFM32_B77
EFM32_B78
EFM32_B79
EBI_ARDY
EFM32_B32
MCU_PF5
MCU_PF6
MCU_PF7
USB_VBUSEN
EFM32_B5
EFM32_B6
EFM32_B7
MCU_PF10
MCU_PF11
MCU_PF12
USB_DM
USB_DP
USB_ID
EBI_BL0
EBI_BL1
EFM32_B10
EFM32_B11
MCU_PF8
MCU_PF9
MCU_PC11
EFM32_B8
EFM32_B9
EFM32_A43
EBI_WEN
EBI_REN
EBI_ALE
EFM32_B34
EFM32_B35
EFM32_B33
Schematic Title
BRD3600A - GG990 MCU plugin
Page Title
Signal Assignments #2
Designed: AG
Approved: JNO
Size A3
BOM Doc No: <Cage Code>
Document number BRD3600A
Revision A05
Design Created Date: Wednesday, December 03, 2008
Sheet Created Date Tuesday, August 04, 2009
Sheet Modified Date Wednesday, April 25, 2012
Sheet 6 of 7

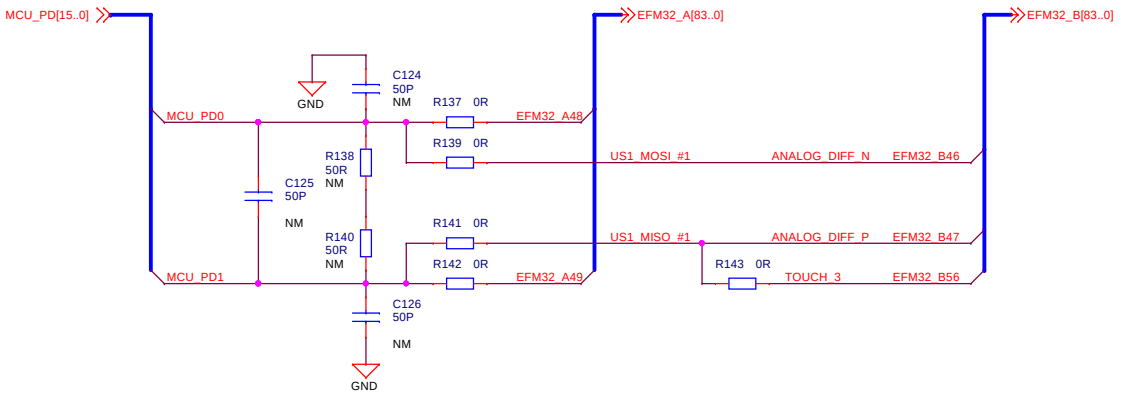

TOP

	Schematic Title: **BRD3600A - GG990 MCU plugin**
	Page Title: **Misc Connections**
Designed: AG	Approved: JNO
Size: A3	BOM Doc No: <Cage Code>
Document number: **BRD3600A**	Revision: A05
Design Created Date: Wednesday, December 03, 2008	Sheet Created Date: Monday, March 14, 2011
Sheet Modified Date: Wednesday, April 25, 2012	Sheet 7 of 7