Wireless STK Mainboard

Board Function	Page
Title Page	1
Top Level Hierarchy	2
User Interface	3
Radio Module Interface	4
Voltage Regulators	5
Isolation & Level Shifting	6
Debug Multiplexer	7
Advanced Energy Monitor	8
Board Controller IO	9
Board Controller Power & Misc.	10
Board Controller Peripherals	11

Revision History

Rev.	Description
A00	Initial prodcution version.

PCB1

PCB4001

/
STK

Schematic Title	Wireless Starter Kit Mainboard
Page Title	Title Page
Designed: DDB	Approved: JNO
Size A3	BOM Doc No: <Cage Code>
Document number	BRD4001A
Revision	A00
Design Created Date:	Wednesday, December 03, 2008
Sheet Created Date	Saturday, March 21, 2009
Sheet Modified Date	Tuesday, August 05, 2014
Sheet	1 of 12

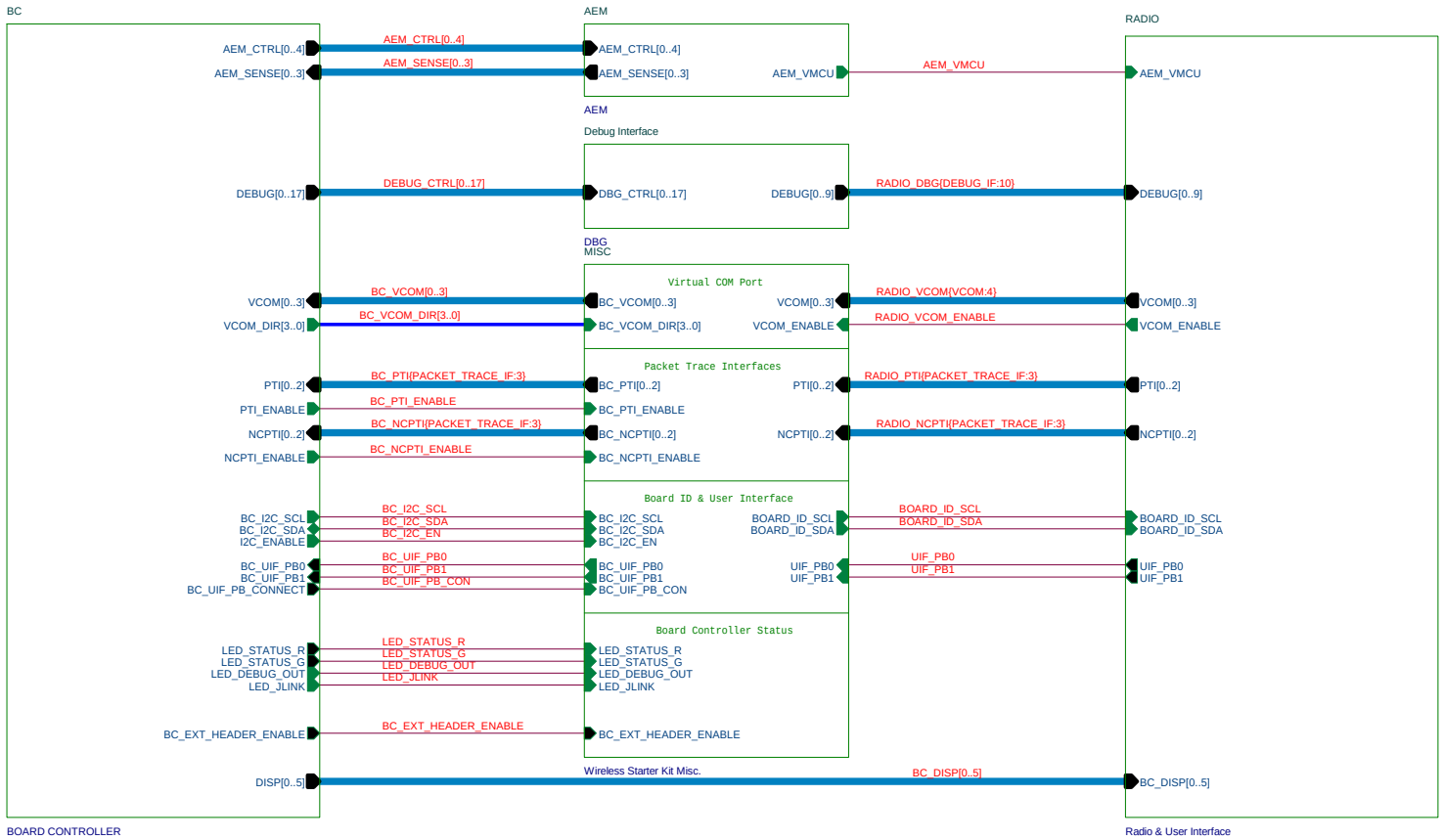

/
STK

SILICON LABS

Designed: DDB	Approved: JNO
Size: A3	BOM Doc No: <Cage Code>
Design Created Date: Wednesday, December 03, 2008	

Schematic Title
Wireless Starter Kit Mainboard

Page Title
Top Level Hierarchy

Document number: **BRD4001A**		Revision: A00
Sheet Created Date: Wednesday, June 19, 2013	Sheet Modified Date: Monday, August 04, 2014	Sheet 2 of 12

Memory LCD-TFT Display & Multiplexer

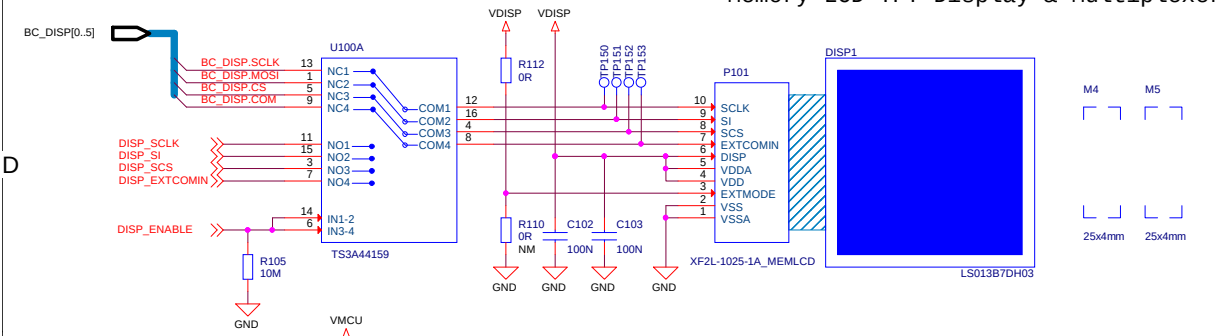

User pushbuttons

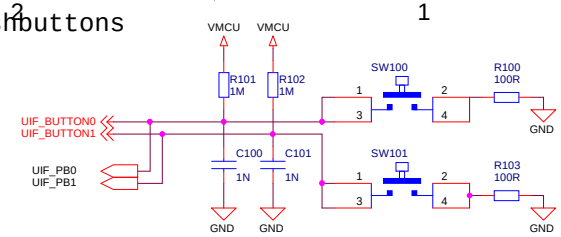

User LEDs

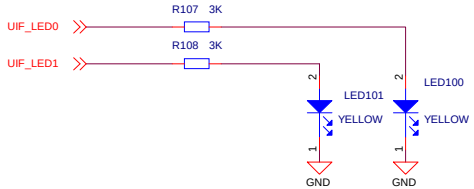

Display Power Switch

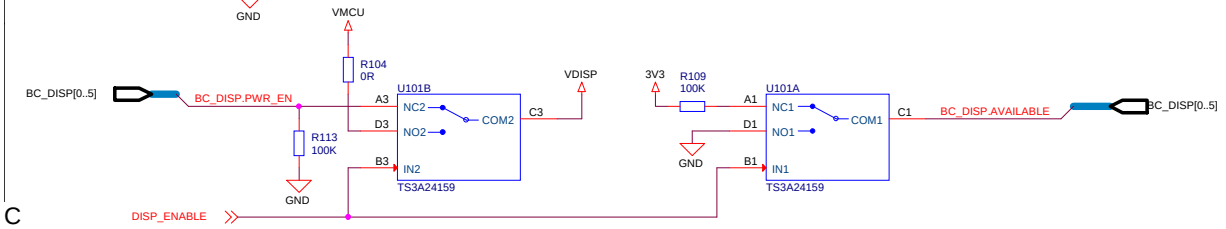

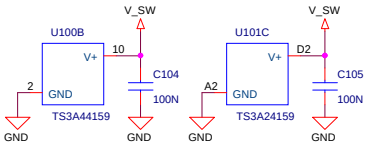

DISP_ENABLE	Connected	VDISP	BC_DISP_AVAILABLE
1	RADIO	VMCU	GND
0	BC	BC_DISP_PWR_EN	3V3

Breakout Connections

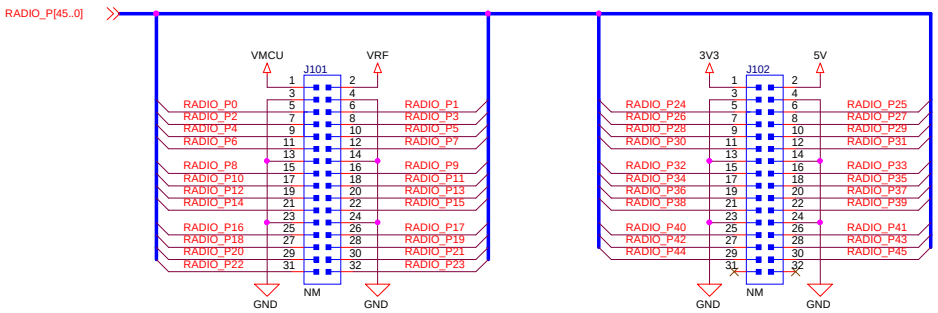

EXP port

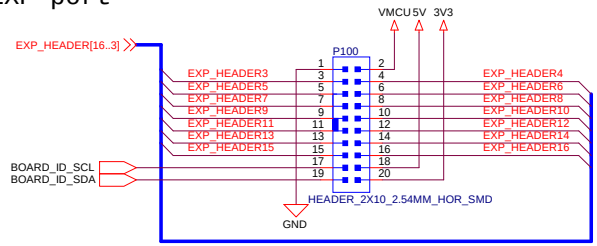

EXP-Header Functionality

1	GND	
3		ACMP
5		ACMP
7		ACMP
9		ACMP
11		DAC
13		DAC
15	I2C_SCL	ADC
17	Reserved for EXP Board ID	
19	Reserved for EXP Board ID	

2	VMCU	
4	SPI_MOSI	ADC
6	SPI_MISO	ADC
8	SPI_SCLK	ADC
10	SPI_#CS	ADC
12	UART_TX	ADC
14	UART_RX	ADC
16	I2C_SDA	ADC
18	5V	
20	3V3	

Radio & User Interface

SILICON LABS

Schematic Title: **Wireless Starter Kit Mainboard**

Page Title: **User Interface**

Designed: DDB	Approved: JNO		
Size: A3	BOM Doc No:	Document number: BRD4001A	Revision: A00
Design Created Date: Wednesday, December 03, 2008		Sheet Created Date: Wednesday, August 28, 2013	Sheet Modified Date: Monday, July 07, 2014
			Sheet 3 of 12

Radio Board Connectors

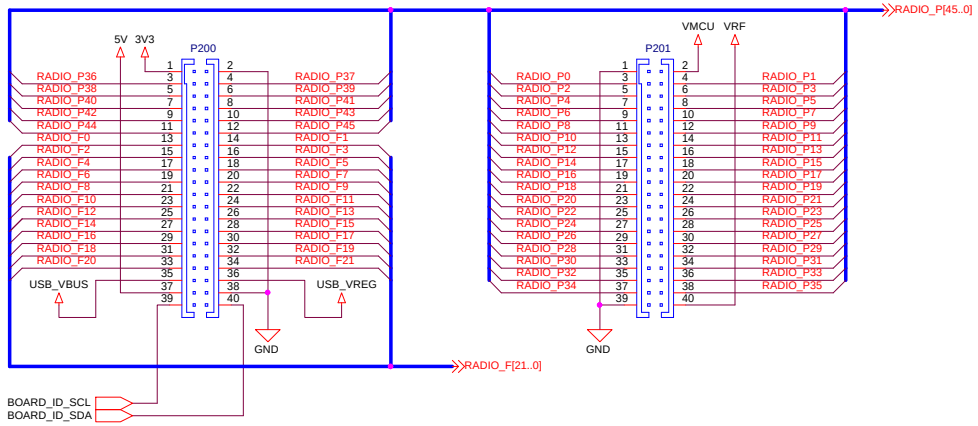

Radio Power Switch

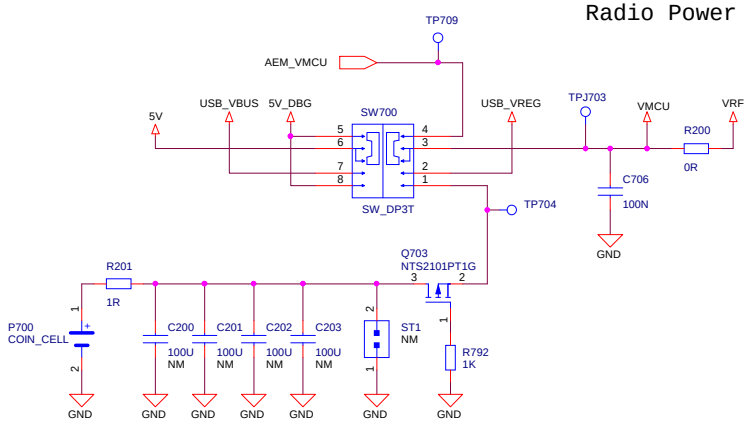

Radio Reset

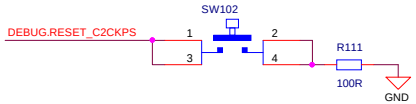

Switch Pos.	Target Supply	EXP Header 5V
1	Output from AEM	J-Link 5V_DBG
2	Target USB_VREG	Target USB_VBUS
3	Coin Cell Battery	(J-Link 5V_DBG)

Dedicated functions on RF Board Connectors

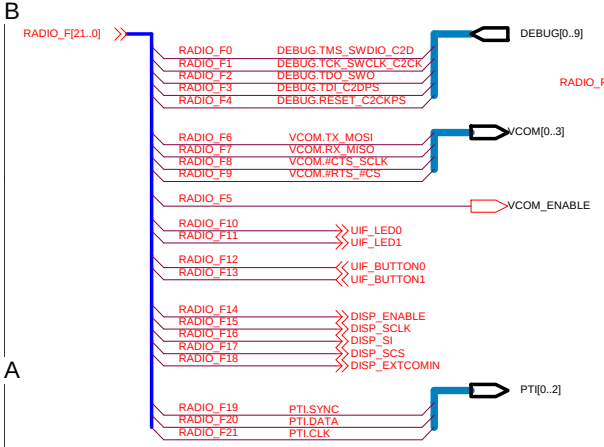

Functions shared with breakout pins on RF Board Connectors

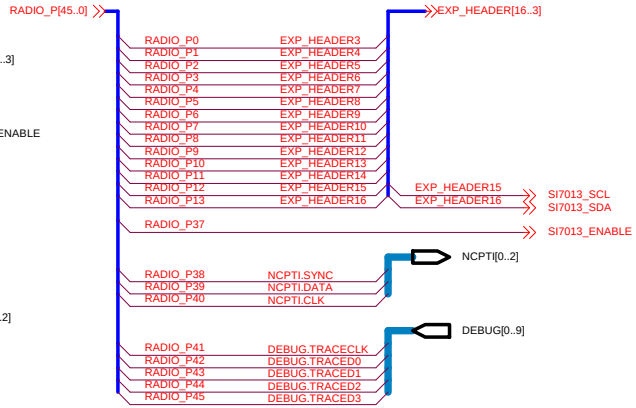

Relative Humidity & Temperature Sensor

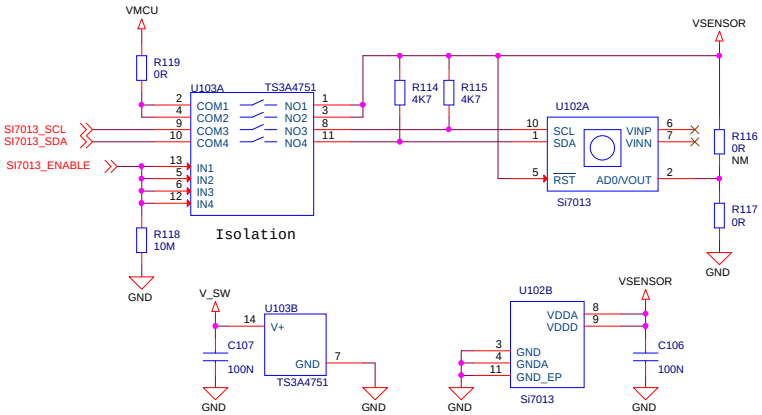

Radio & User Interface

Schematic Title	**Wireless Starter Kit Mainboard**
Page Title	**Radio Module Interface**
Designed: DDB	Approved: JNO
Size A3	BOM Doc No: <Cage Code>
Document number	BRD4001A
Revision	A00
Design Created Date:	Wednesday, December 03, 2008
Sheet Created Date	Wednesday, August 28, 2013
Sheet Modified Date	Monday, July 07, 2014
Sheet	4 of 12

Indicators:

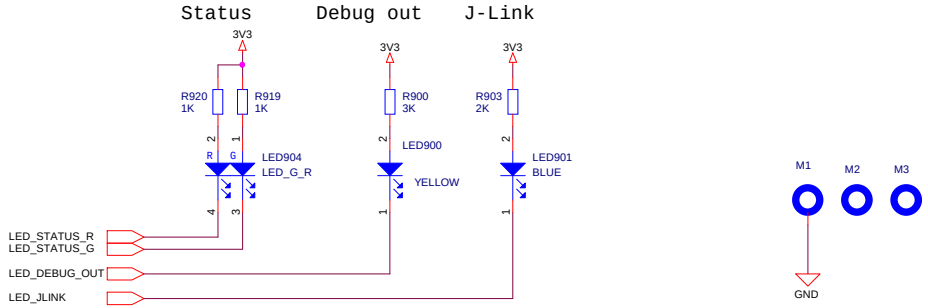

3V3 Regulator

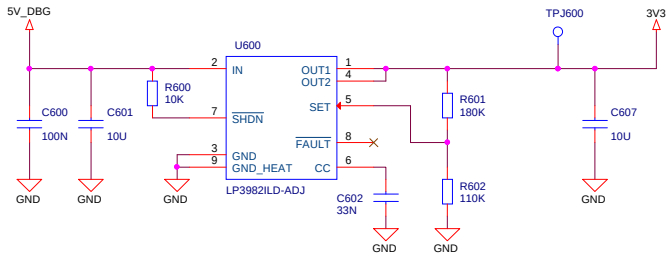

VMCU Voltage Mirror

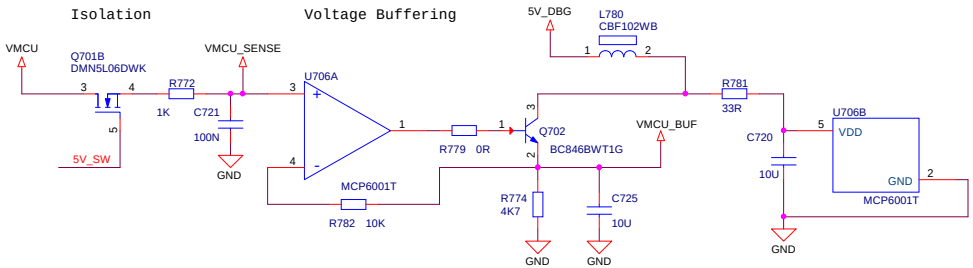

Power Supply for Analog Switches

Analog switches used for isolation are powered by 3V6_SW when the USB cable is connected, otherwise by VMCU.

J-Link USB Cable	PMOS State	NMOS State	V_SW	VMCU_SENSE
Connected	Off	ON	3.6V	VMCU
Disconnected	ON	OFF	VMCU	Isolated

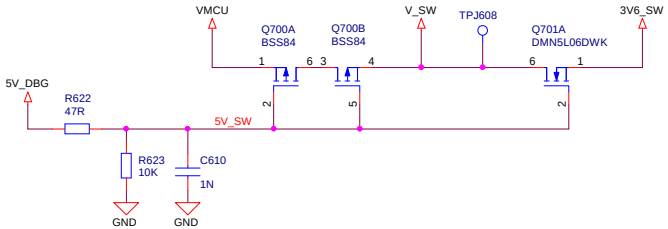

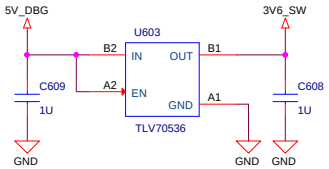

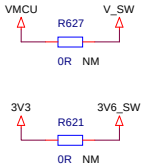

I2C & Push Button Isolation & Level Shift

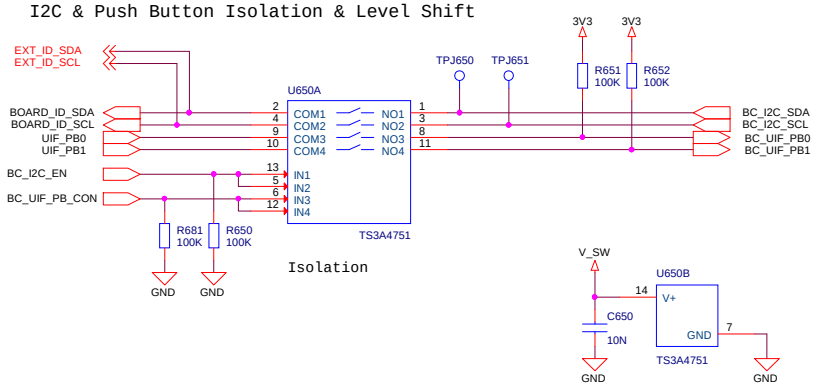

Starter Kit Common

SILICON LABS	Schematic Title: **Wireless Starter Kit Mainboard**
	Page Title: **Voltage Regulators**
Designed: DDB	Approved: JNO
Size: A3	BOM Doc No: <Cage Code>
Document number: **BRD4001A**	Revision: A00
Design Created Date: Wednesday, June 12, 2013	Sheet Created Date: Tuesday, June 18, 2013
Sheet Modified Date: Thursday, May 22, 2014	Sheet 5 of 12

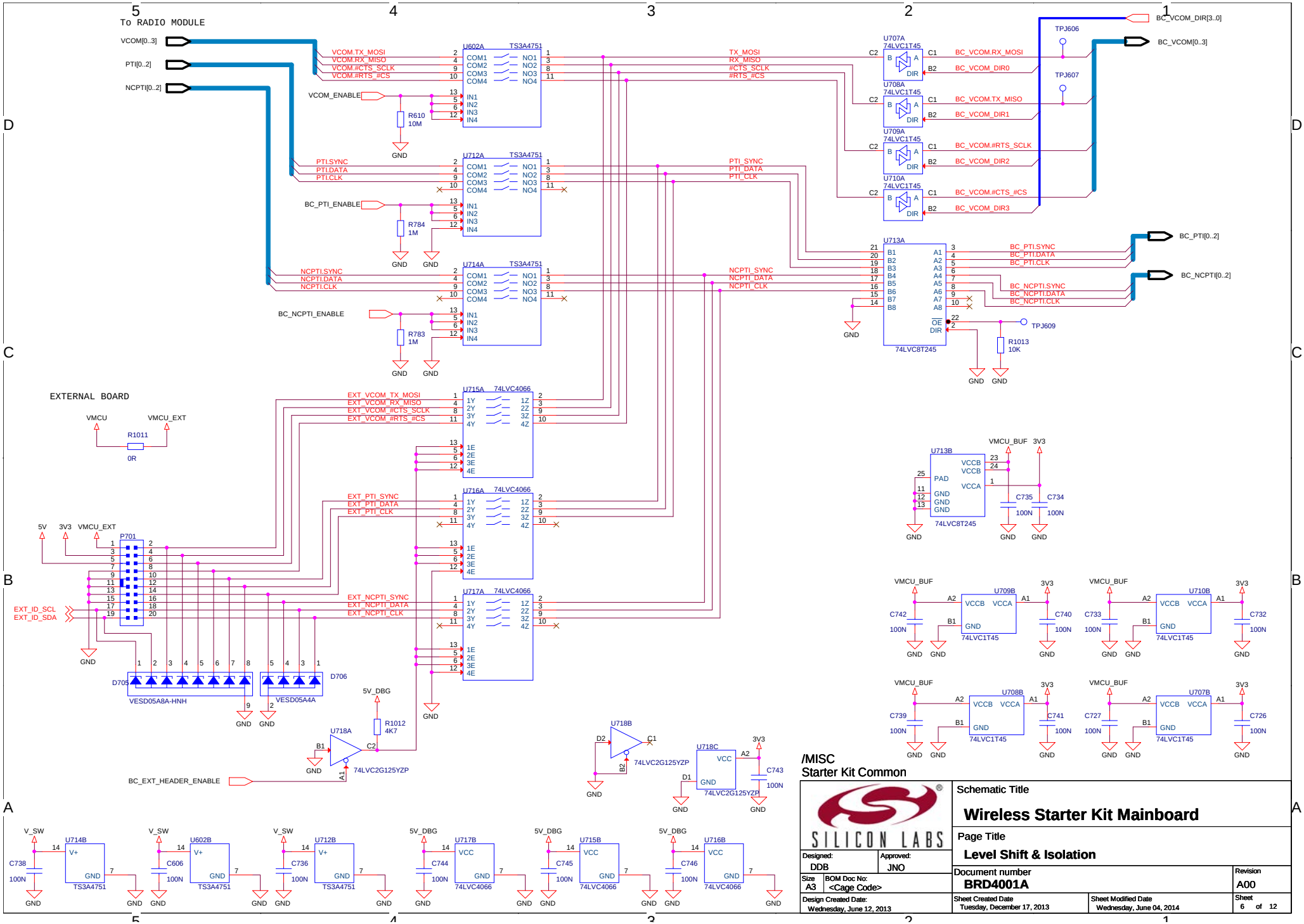
To RADIO MODULE
VCOM[0..3]
PTI[0..2]
NCPTI[0..2]
U602A TS3A4751
U712A TS3A4751
U714A TS3A4751
VCOM_ENABLE
BC_PTI_ENABLE
BC_NCPTI_ENABLE
R610 10M
R784 1M
R783 1M
U707A 74LVC1T45
U708A 74LVC1T45
U709A 74LVC1T45
U710A 74LVC1T45
BC_VCOM_DIR[3..0]
BC_VCOM[0..3]
TPJ606
TPJ607
U713A 74LVC8T245
BC_PTI[0..2]
BC_NCPTI[0..2]
TPJ609
R1013 10K
EXTERNAL BOARD
VMCU
VMCU_EXT
R1011 0R
U715A 74LVC4066
U716A 74LVC4066
U717A 74LVC4066
P701
EXT_ID_SCL
EXT_ID_SDA
D705
D706
VESD05A8A-HNH
VESD05A4A
5V_DBG
R1012 4K7
U718A 74LVC2G125YZP
BC_EXT_HEADER_ENABLE
U718B 74LVC2G125YZP
U718C 74LVC2G125YZP
U713B 74LVC8T245
U709B 74LVC1T45
U710B 74LVC1T45
U708B 74LVC1T45
U707B 74LVC1T45
U714B TS3A4751
U602B TS3A4751
U712B TS3A4751
U717B 74LVC4066
U715B 74LVC4066
U716B 74LVC4066
/MISC
Starter Kit Common
SILICON LABS
Schematic Title
Wireless Starter Kit Mainboard
Page Title
Level Shift & Isolation
Designed: DDB
Approved: JNO
Size A3
BOM Doc No: <Cage Code>
Document number BRD4001A
Revision A00
Design Created Date: Wednesday, June 12, 2013
Sheet Created Date Tuesday, December 17, 2013
Sheet Modified Date Wednesday, June 04, 2014
Sheet 6 of 12

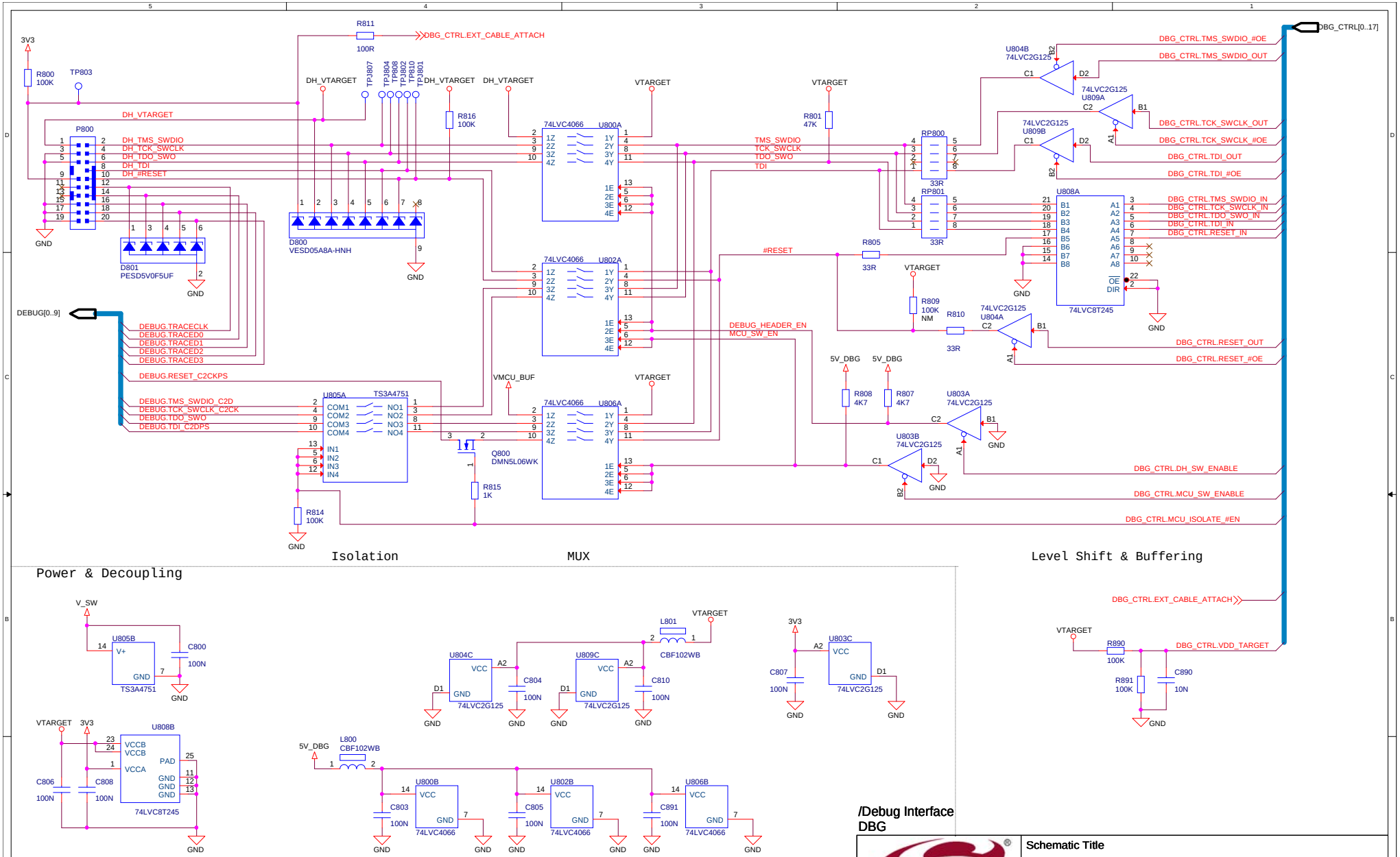

Mode	DEBUG_MCU_SW_ENABLE	DEBUG_DH_SW_ENABLE	DEBUG_BUF_#OE	ISOLATE_#EN	DH_VTARGET	VTARGET
Debug Out	0	1	0	0	External voltage	External voltage
MCU Debug	1	0	0	1	Disconnected	VMCU
Debug In	1	1	1	1	VMCU	VMCU
Debug Off	0	0	1	0	-	-

/Debug Interface
DBG

SILICON LABS

Designed: DDB	Approved: JNO
Size A3	BOM Doc No: <Cage Code>
Design Created Date: Monday, August 12, 2013	

Schematic Title
Wireless Starter Kit Mainboard

Page Title
Debug Interface

Document number
BRD4001A

Revision
A00

Sheet Created Date: Monday, August 12, 2013

Sheet Modified Date: Monday, July 07, 2014

Sheet 7 of 12

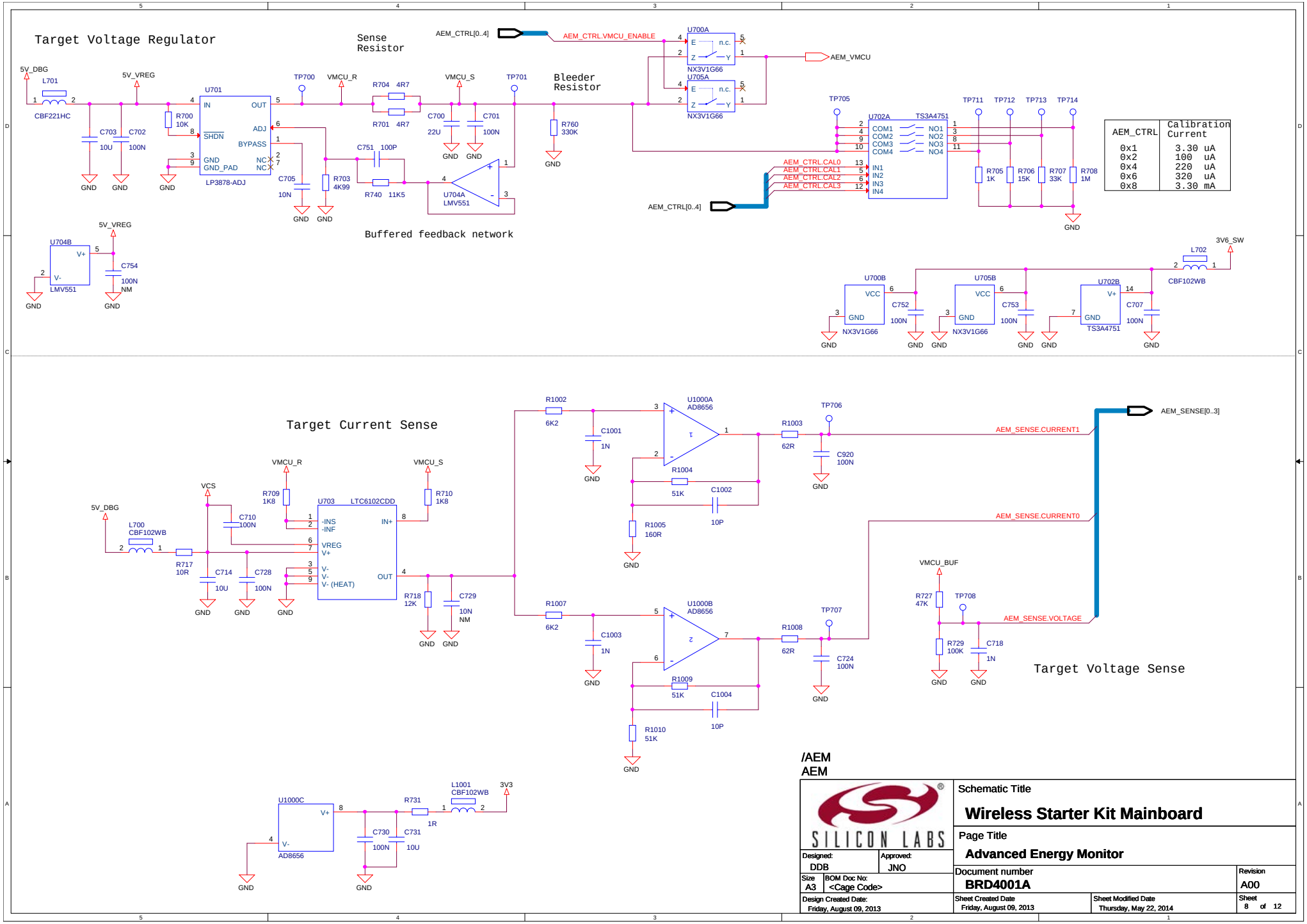

/AEM
AEM

Schematic Title	Wireless Starter Kit Mainboard
Page Title	Advanced Energy Monitor
Designed: DDB	Approved: JNO
Size A3	BOM Doc No: <Cage Code>
Document number	BRD4001A
Revision	A00
Design Created Date:	Friday, August 09, 2013
Sheet Created Date	Friday, August 09, 2013
Sheet Modified Date	Thursday, May 22, 2014
Sheet	8 of 12

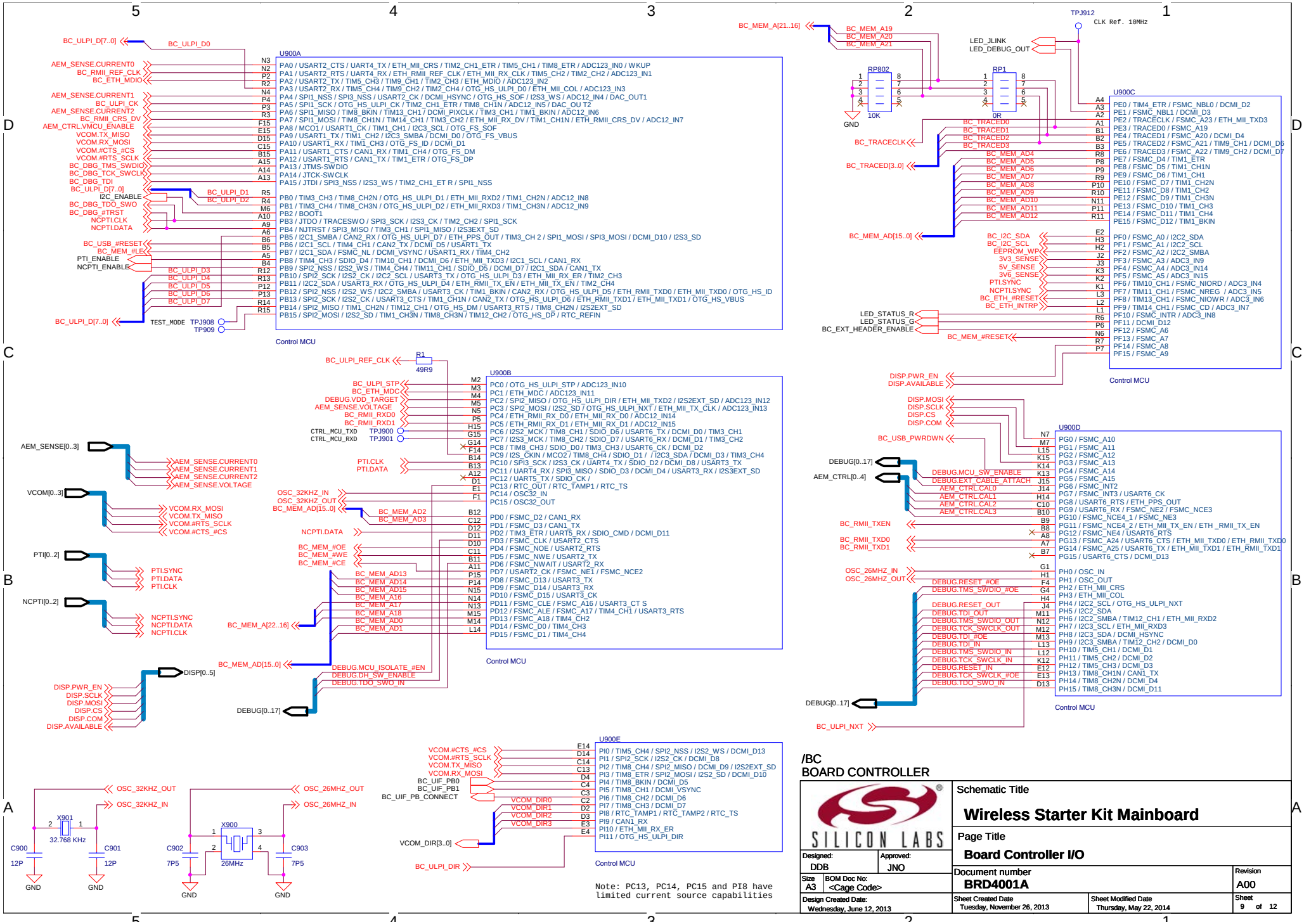

/BC
BOARD CONTROLLER

SILICON LABS	Schematic Title: **Wireless Starter Kit Mainboard**	
	Page Title: **Board Controller I/O**	
Designed: DDB	Approved: JNO	
Size: A3	BOM Doc No: <Cage Code>	Document number: **BRD4001A** — Revision: A00
Design Created Date: Wednesday, June 12, 2013	Sheet Created Date: Tuesday, November 26, 2013	Sheet Modified Date: Thursday, May 22, 2014 — Sheet 9 of 12

Board Controller Power & Decoupling:

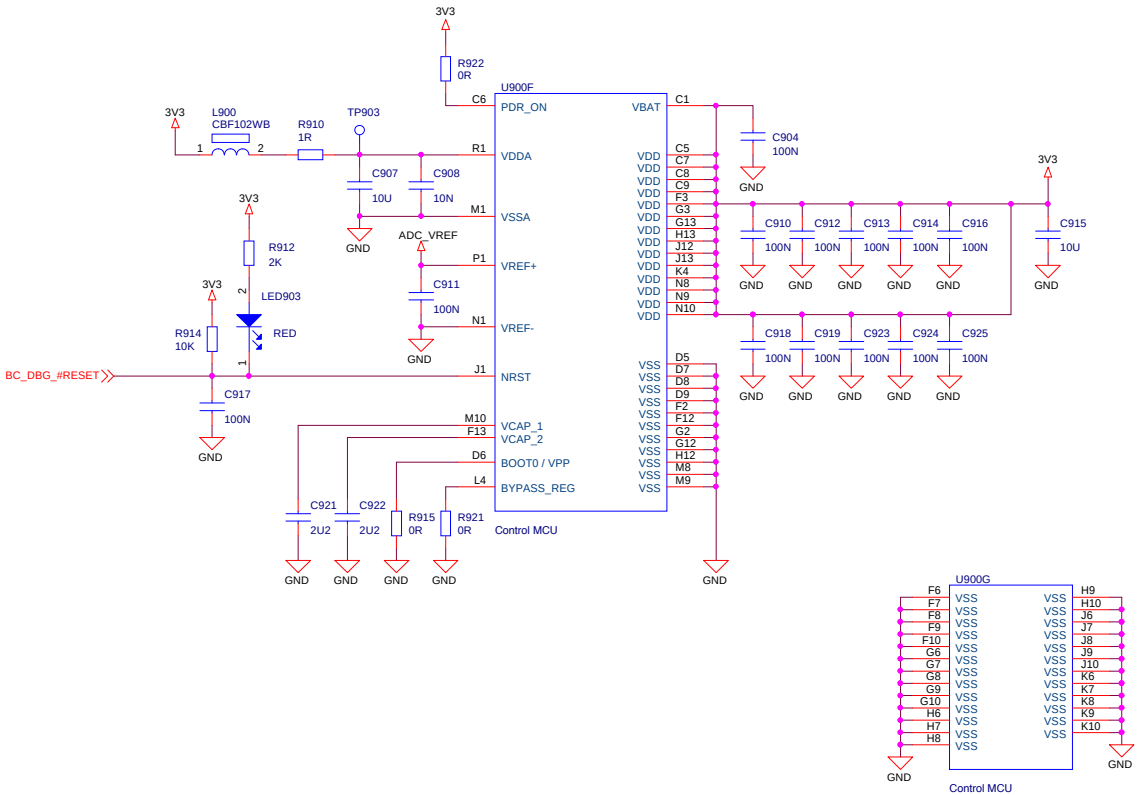

ADC referance voltage

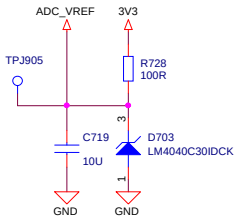

POWER SENSE

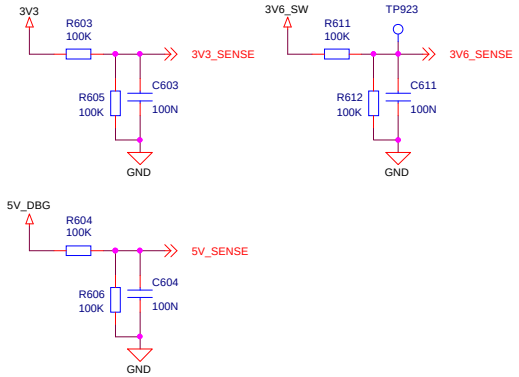

Debug Test Points:
Replaces legacy 20-pin ARM header on secondary side

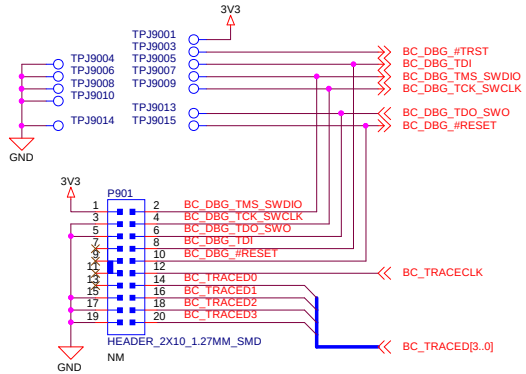

19-pin JTAG/SWD and Trace connector

/BC
BOARD CONTROLLER

SILICON LABS	Schematic Title: **Wireless Starter Kit Mainboard**		
	Page Title: **Board Controller Power & Misc**		
Designed: DDB	Approved: JNO	Document number: **BRD4001A**	Revision: A00
Size: A3	BOM Doc No: <Cage Code>		
Design Created Date: Wednesday, June 12, 2013	Sheet Created Date: Friday, December 06, 2013	Sheet Modified Date: Thursday, May 22, 2014	Sheet 10 of 12

10/100 Mbit Ethernet PHY

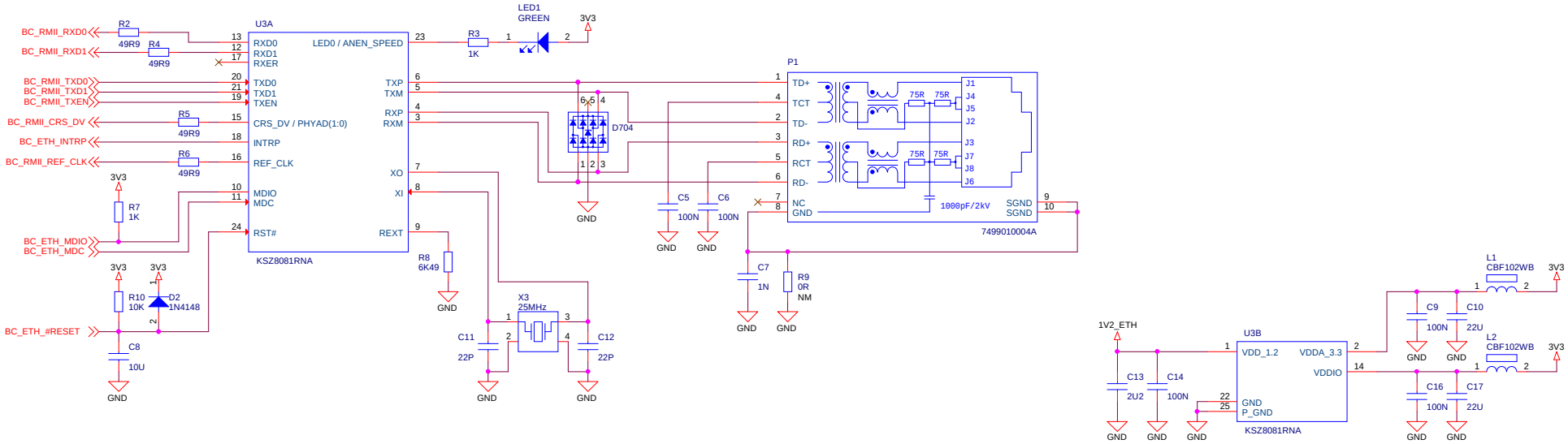

USB High Speed

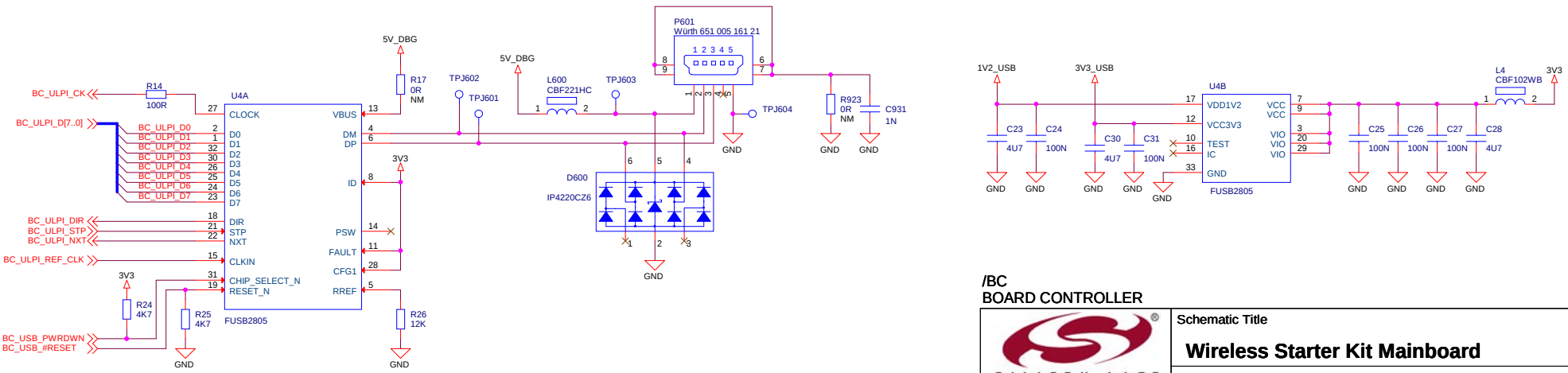

/BC
BOARD CONTROLLER

SILICON LABS	Schematic Title: **Wireless Starter Kit Mainboard**	
	Page Title: **Board Controller Peripherals**	
Designed: DDB	Approved: JNO	
Size: A3	BOM Doc No: <Cage Code>	Document number: **BRD4001A** — Revision: A00
Design Created Date: Wednesday, June 12, 2013	Sheet Created Date: Thursday, November 28, 2013	Sheet Modified Date: Thursday, May 22, 2014 — Sheet 11 of 12

FLASH Memory - Multiplexed 16-bit

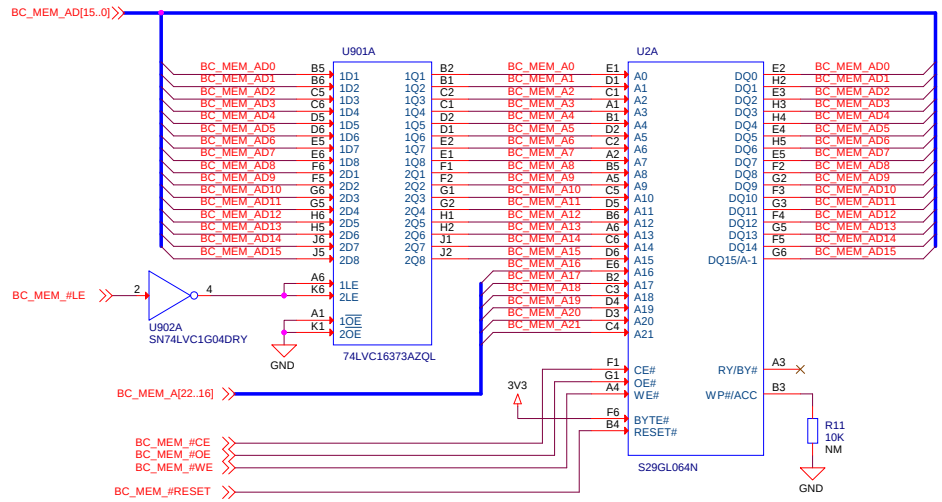

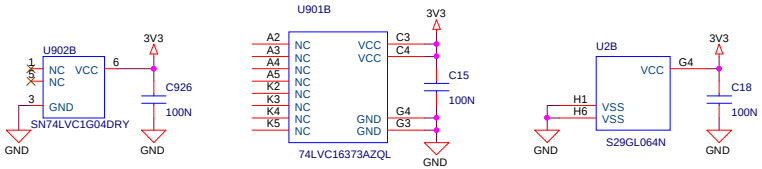

I2C EEPROM
Board Identification

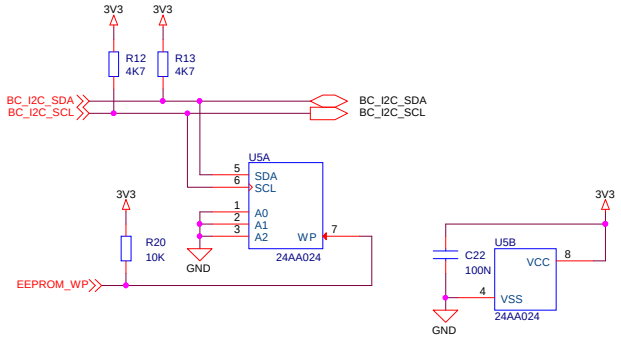

/BC
BOARD CONTROLLER

SILICON LABS	Schematic Title: **Wireless Starter Kit Mainboard**		
	Page Title: **Board Controller Memory**		
Designed: DDB	Approved: JNO	Document number: **BRD4001A**	Revision: A00
Size: A3	BOM Doc No: <Cage Code>		
Design Created Date: Wednesday, June 12, 2013	Sheet Created Date: Wednesday, January 08, 2014	Sheet Modified Date: Thursday, May 22, 2014	Sheet 12 of 12