Bulletin #1508121

User Registration
Register today to create your account on Silabs.com. Your personalized profile allows you to receive technical document updates, new product announcements, "how-to" and design documents, product change notices (PCN) and other valuable content available only to registered users. http://www.silabs.com/profile

Bulletin Date: 8/12/2015	**Bulletin Effective Date:** 8/12/2015	
Title: Plastic Reel Supplier(12mm hub width) Addition for EFM32 Products from ASEKR		
Originator: GeunJong Baek	**Phone:** +65 6511 6476	**Dept:** Supplier Management
Customer Contact: Kathy Haggar	**Phone:** +1 512 532 5261	**Dept:** Sales

Bulletin Details

Description:
Silicon Labs is pleased to announce the addition of Plastic Reel supplier (Kostat) for EFM32 products that are shipped out of ASE Korea.

All critical dimensions are the same and meet EIA 481 standards.

For details, please refer to the comparison table and drawings in Appendix 1.

Appendix1(12mm Hub width)
For 12mm Hub width

Vendor	Semiland	Kostat	Comparison remark
part#	SRL-12134H	KSB-330X100-12	
Measurement unit	mm	mm	
Reel Hub Width(W1)	12.4+2.0/-0.0	12.4+2.0/-0.0	Same
Reel Outer Width(W2)	16.4+2.0/-0.0	16.4+2.0/-0.0	Same
Reel Diameter	330+0.2/-2.0	330+0.2/-2.0	Same
Color	Black	Black	Same

The information contained in this document is PROPRIETARY to Silicon Laboratories, Inc. and shall not be reproduced or used in part or whole without Silicon Laboratories' written consent. The document is uncontrolled if printed or electronically saved.

Reel drawing (Semiland)

Size	12mm	16mm	24mm	32mm	44mm	56mm
A	330 $^{+2.0}_{-1.0}$	330 $^{+2.0}_{-1.0}$	330 $^{+2.0}_{-1.0}$	330 $^{+2.0}_{-1.0}$	330 $^{+2.0}_{-1.0}$	330 $^{+2.0}_{-1.0}$
B	1.5min	1.5min	1.5min	1.5min	1.5min	1.5min
C	13.0 $^{+0.5}_{-0.2}$	13.0 $^{+0.5}_{-0.2}$	13.0 $^{+0.5}_{-0.2}$	13.0 $^{+0.5}_{-0.2}$	13.0 $^{+0.5}_{-0.2}$	13.0 $^{+0.5}_{-0.2}$
D	20.2min	20.2min	20.2min	20.2min	20.2min	20.2min
N	100 $^{+3.0}_{-1.0}$	100 $^{+3.0}_{-1.0}$	100 $^{+3.0}_{-1.0}$	100 $^{+3.0}_{-1.0}$	100 $^{+3.0}_{-1.0}$	100 $^{+3.0}_{-1.0}$
W1	12.4 $^{+2.0}_{-0.0}$	16.4 $^{+2.0}_{-0.0}$	24.4 $^{+2.0}_{-0.0}$	32.4 $^{+2.0}_{-0.0}$	44.4 $^{+2.0}_{-0.0}$	56.4 $^{+2.0}_{-0.0}$
W2	16.4 $^{+2.0}_{-0.0}$	20.4 $^{+2.0}_{-0.0}$	28.4 $^{+2.0}_{-0.0}$	36.4 $^{+2.0}_{-0.0}$	48.4 $^{+2.0}_{-0.0}$	60.4 $^{+2.0}_{-0.0}$
W3	12.4 $^{+2.0}_{-0.0}$	16.4 $^{+2.0}_{-0.0}$	24.4 $^{+2.0}_{-0.0}$	32.4 $^{+2.0}_{-0.0}$	44.4 $^{+2.0}_{-0.0}$	56.4 $^{+2.0}_{-0.0}$
PART#	SRL-12134H	SRL-16134H	SRL-24134H	SRL-32134H	SRL-44134H	SRL-56134H

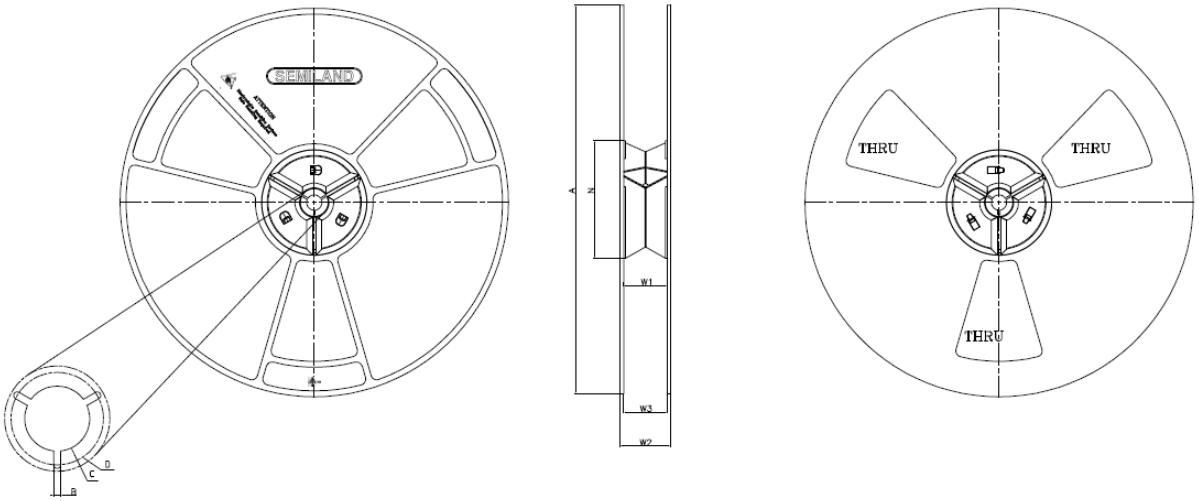

UNLESS OTHERWISE SPECIFIED INCHES .XX ±.001 .XXX ±.0005 MILLIMETERS .X ±.02 .XX ±.01 ANGULAR ±.5° 8 RMS ALL MACHINED SURFACES FEATURE CONTROL SYMBOLS PER ANSI Y14.5 M BREAK ALL SHARP EDGES AND CORNERS, REMOVE BURRS. UNDERLINED DIM, NOT TO SCALE. THIRD ANGLE ORTHOGRAPHIC PROJECTION IS USED.	SEMILAND		
	UNIT: MM	TITLE: PLASTIC REEL FOR 330 mm(Dia) X 100 mm(Hub)	
	DRAWN BY: S.H.CHO		
	CHECKED BY: M.S.CHOI	SIZE: P	DWG. NO.: SRL-13D4H	REV. NO.: D
	APPROVED BY: Y.J.LEE	SCALE: 1/2	RELEASE DATE: APR.16.2014	SHEET: 1 of 1

The information contained in this document is PROPRIETARY to Silicon Laboratories, Inc. and shall not be reproduced or used in part or whole without Silicon Laboratories' written consent. The document is uncontrolled if printed or electronically saved.

Reel drawing (Kostat)

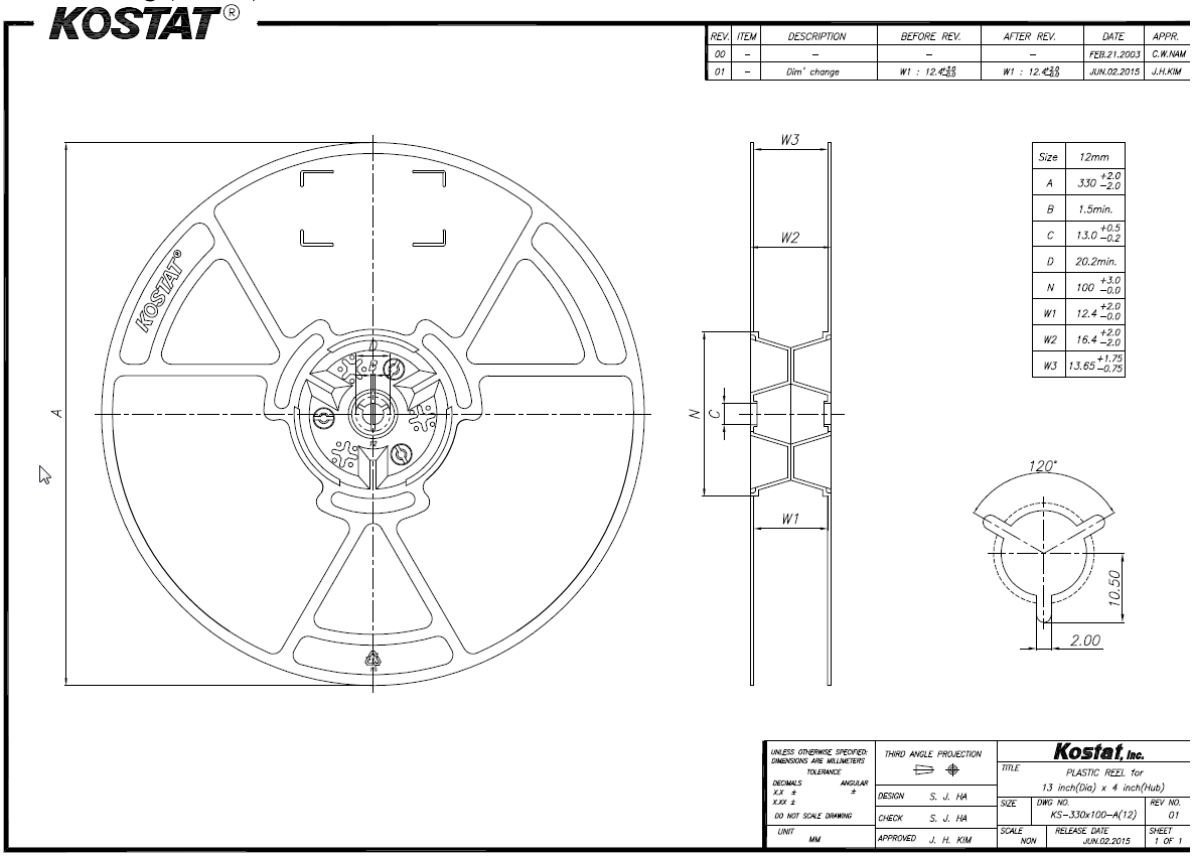

Reason:
Material sourcing capacity expansion for continuity of supply

Product Identification:

EFM32HG108F32G-A-QFN24R	EFM32HG309F32G-B-QFN24R	EFM32TG225F8-BGA48
EFM32HG108F32G-B-QFN24R	EFM32HG309F64G-A-QFN24R	EFM32TG825F16-BGA48
EFM32HG108F64G-A-QFN24R	EFM32HG309F64G-B-QFN24R	EFM32TG825F32-BGA48
EFM32HG108F64G-B-QFN24R	EFM32TG108F16-QFN24	EFM32TG825F8-BGA48
EFM32HG110F32G-A-QFN24R	EFM32TG108F32-QFN24	EFM32ZG108F16-QFN24
EFM32HG110F32G-B-QFN24R	EFM32TG108F4-QFN24	EFM32ZG108F32-QFN24
EFM32HG110F64G-A-QFN24R	EFM32TG108F8-QFN24	EFM32ZG108F4-QFN24
EFM32HG110F64G-B-QFN24R	EFM32TG110F16-QFN24	EFM32ZG108F8-QFN24
EFM32HG308F32G-A-QFN24R	EFM32TG110F32-QFN24	EFM32ZG110C0951F32G-AR
EFM32HG308F32G-B-QFN24R	EFM32TG110F4-QFN24	EFM32ZG110F16-QFN24
EFM32HG308F64G-A-QFN24R	EFM32TG110F8-QFN24	EFM32ZG110F32-QFN24
EFM32HG308F64G-B-QFN24R	EFM32TG225F16-BGA48	EFM32ZG110F4-QFN24
EFM32HG309F32G-A-QFN24R	EFM32TG225F32-BGA48	EFM32ZG110F8-QFN24

The information contained in this document is PROPRIETARY to Silicon Laboratories, Inc. and shall not be reproduced or used in part or whole without Silicon Laboratories' written consent. The document is uncontrolled if printed or electronically saved.

This change is considered a minor change which does not affect form, fit, function, quality, or reliability. The information is being provided as a customer courtesy. Please contact your local Silicon Labs sales representative with any questions about this notification. A list of Silicon Labs sales representatives may be found at www.silabs.com
Customer Actions Needed: None

The information contained in this document is PROPRIETARY to Silicon Laboratories, Inc. and shall not be reproduced or used in part or whole without Silicon Laboratories' written consent. The document is uncontrolled if printed or electronically saved.