EM358x Reference Design With 0805 Ceramic Balun Front End, USB, Inverted F PCB Antenna, 4-Layer

Sheet	*Description*
1.	Cover Page
2.	Block Diagrams
3.	EM358x/Balun
4.	Appendixes
5.	Revision & Design Notes

This design is intended for use as a reference for custom designs utilizing EM358x ZigBee radios which include the USB option and EM35xx ZigBee radios which do not. Some of the connections shown in this design are different from other Silicon Labs EM35xx ZigBee reference designs which do not include USB. If you are unsure about use of the USB option or if you know your design will not require USB, please contact your region's Silicon Labs Sales Office for assistance with choosing the appropriate EM35xx ZigBee products, features and the corresponding reference design.

Click on the following links below for additional information regarding EM35xx ZigBee products and for the location of the nearest Silicon Labs Sales office;

EM35xx ZigBee Product Information

Silicon Labs Sales Office Locations

SILICON LABS
25 Thomson Place, 2nd Floor
Boston, MA 02210, USA
www.silabs.com
617-951-0200

MCU & Wireless Division Simplicity Support Group

The information in this document is subject to change without notice. The statements, configurations, technical data and recommendations in this document are believed to be accurate and reliable, but are presented without express or implied warranty. The information in this document is the proprietary and confidential property of Silicon Laboratories Inc., and is privileged. No part of the drawing or information may be duplicated or otherwise used without the express permission of Silicon Laboratories Inc.

Title: EM358x/0805 Ceramic Balun W/USB Reference Design			
Part Number:	Rev: A0		
Sheet Name: EM358x_REF_DES_CER_USB_INV-F_Cover.SchDoc			
Date: 4/2/2014	Time: 3:29:08 PM	Sheet: 1 of 5	Size: C

The schematics in this package can be used in both NCP & SOC designs involving the EM358x. Connect NCP to the HOST using either UART or SPI serial connection as shown below.

EM358x NCP with EZSP over Asynchronous Serial (UART)

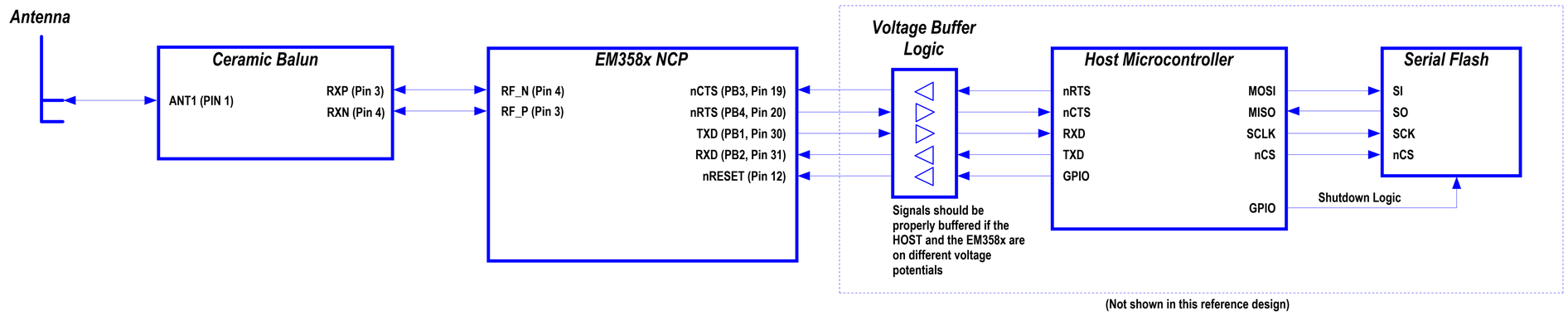

EM358x NCP with EZSP over Synchronous Serial (SPI)

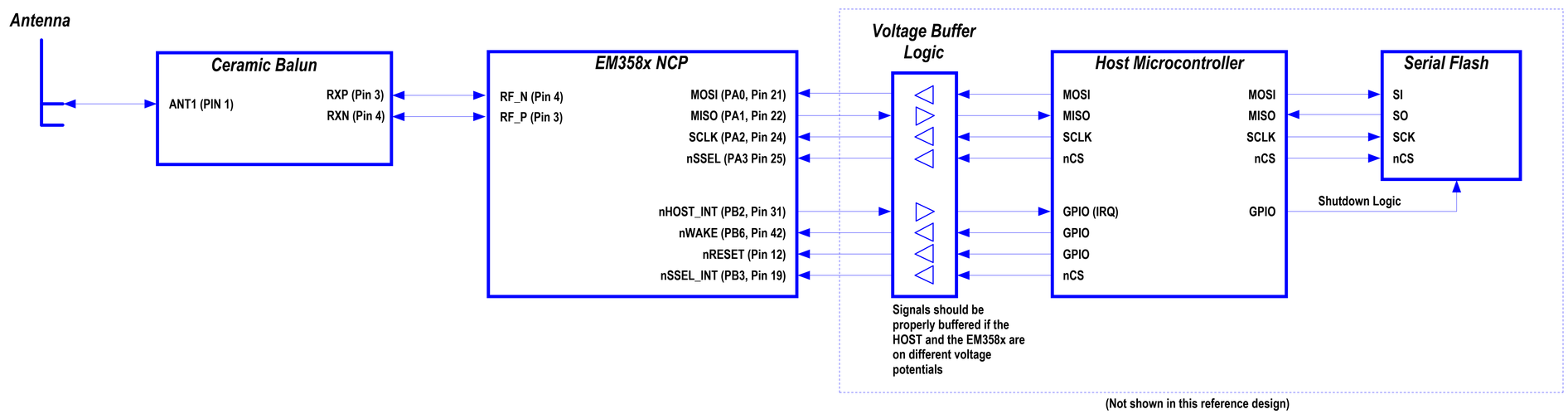

EM358x SOC Reference Design, (USB Option Shown)

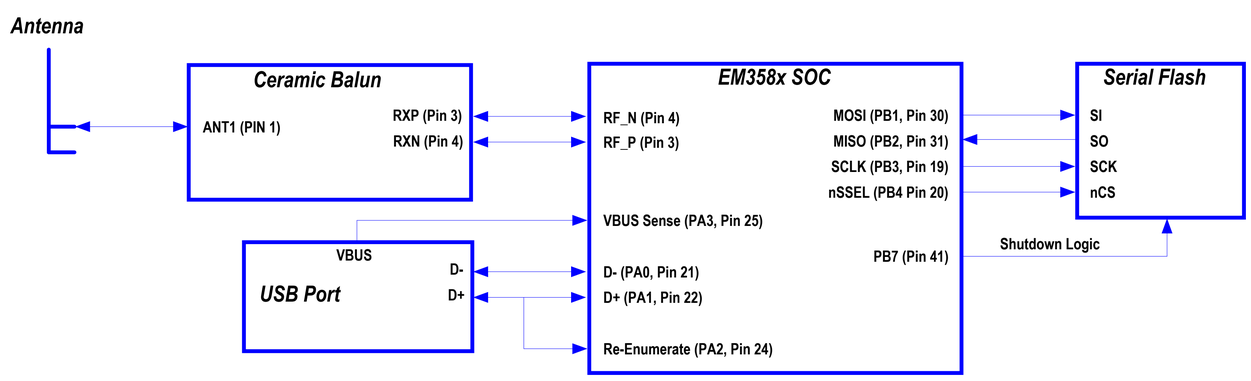

SILICON LABS
25 Thomson Place, 2nd Floor
Boston, MA 02210, USA
www.silabs.com
617-951-0200

MCU & Wireless Division Simplicity Support Group
The information in this document is subject to change without notice. The statements, configurations, technical data and recommendations in this document are believed to be accurate and reliable, but are presented without express or implied warranty. The information in this document is the proprietary and confidential property of Silicon Laboratories Inc., and is privileged. No part of the drawing or information may be duplicated or otherwise used without the express permission of Silicon Laboratories Inc.

Title: EM358x/0805 Ceramic Balun W/USB Reference Design
Part Number: Rev: A0
Sheet Name: EM358x_REF_DES_CER_USB_INV-F_Block.SchDoc
Date: 4/2/2014 Time: 3:29:08 PM Sheet: 2 of 5 Size: C

Packet Trace Port (Optional)

The J1 Packet Trace Port interface footprint, sized for a 10 pin dual row 0.05" pitch connector compatible with a Samtec FFSD series ribbon cable, (FFSD-05-D-12.00-01N), is required to make use of Ember Desktop software tools by enabling a direct connection to an Ember Debug Adapter (ISA3). This part can be optionally made 'Do Not Install' in production.

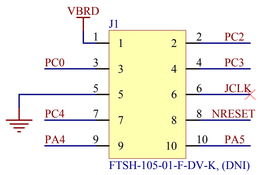

Board to Board Interface (Optional)

The X1 interface is not required for customer designs and is a surface mount 0.05" pitch header arrangement designed to be compatible with the EM358x Series Development Kit Breakout Boards. J2 and J3 can be optionally made 'Do Not Install', or replaced with a different board to board interface arrangement, or removed entirely to facilitate a merger into an already existing PCB layout design.

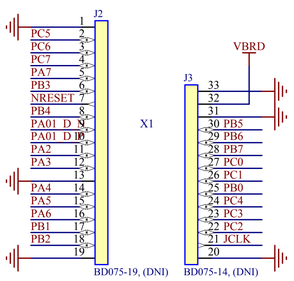

Serial Flash (Optional)

Serial Flash is required for Over The Air (OTA) Bootloader support as mandated by some applications of the ZigBee profiles but can be optionally made 'Do Not Install' for any end use application not requiring OTA Bootloader support.

For maximum power efficiency in custom application code, include firmware instructions to sleep the Serial Flash and any other peripherals prior to placing the EM358x in shutdown mode.

For applications utilizing the EM358x USB feature, connect the Serial Flash to Serial Controller 1, (SC1), as shown below. In applications where the USB feature is not utilized, the Serial Flash can be connected to Serial Controller 2, (SC2).

For a list of alternate Serial Flash parts and their accompanying software drivers, see the table in Appendix A.

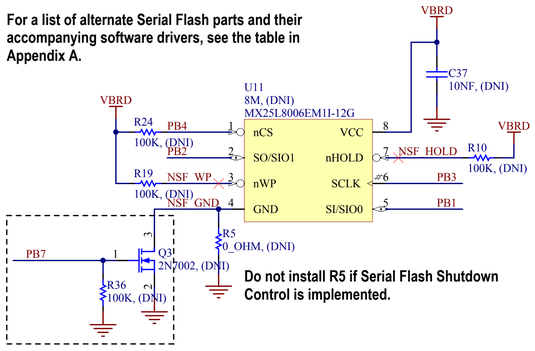

Serial Flash Shutdown Control (Optional)

The EM358x SOC reference design uses PB7 to enable or disable Q3 for the purpose of controlling current consumed by the Serial Flash when not in use, however, any GPIO can be utilized for this purpose. Q3 and R36 can be optionally made "Do Not Install" if overall power efficiency is not a requirement.

Shutdown signaling for the Serial Flash, FEM, and other peripherals can be tied to a single GPIO for applications not requiring a separate control signal for each.

A custom OTA Application Bootloader file with the command line EEPROM_USES_SHUTDOWN_CONTROL defined in the header file, is required for designs using the Serial Flash shutdown control.

EM358x Zigbee SOC

High-Performance, Integrated ZigBee/802.15.4 System-on-Chip Solution with an internal 32-bit ARM CORTEX-M3 core processor with up to 64K of internal RAM and up to 512K of internal FLASH and AES128 encryption accelerator in a 7 x 7 mm QFN-48 package.

1V25_CORE Component Note

A ceramic capacitor with a minimum value of 1uF between pin 17 and ground is required for cost effective 1V25_CORE voltage regulator output stability.

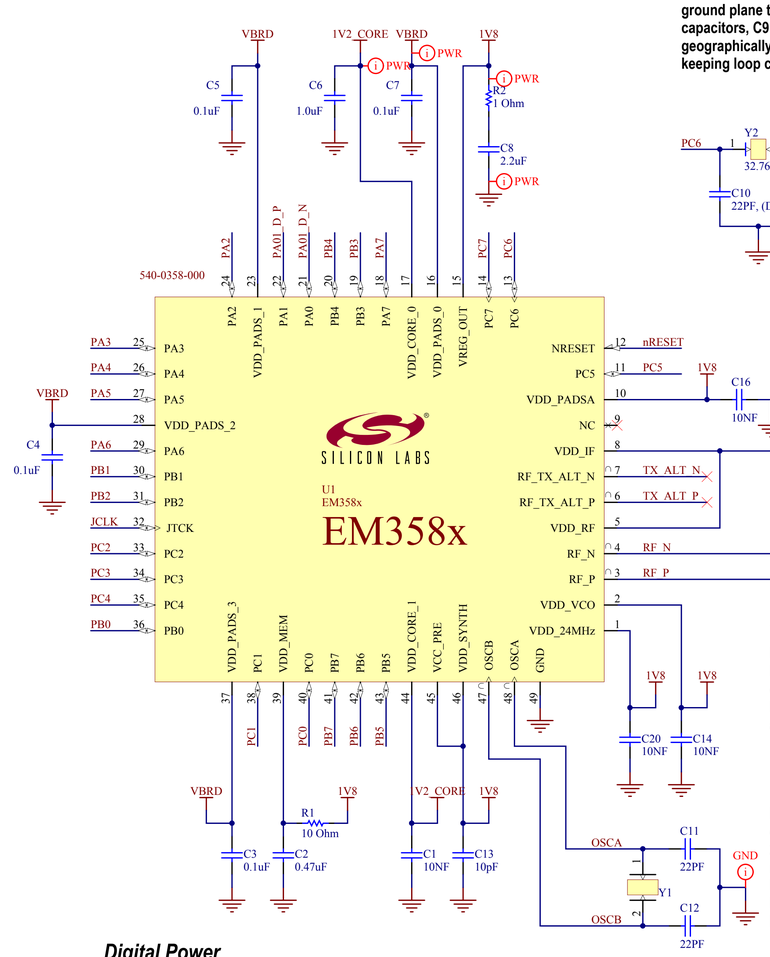

32.768KHz Clock source (Optional)

If precision sleep timing is not required, use the internal RC clock source. Designs requiring both precision sleep timing and RF Front End control of the RX switch may also require PC6 to be repurposed for the 32.768 KHz clock, as well as implement a custom RX switch control circuit optimized for low power consumption. Populate Y2, C9 and C10 only for applications having a need for precise sleep timer requirements. Alternately, a precision timer clock module can be utilized in place of the crystal, negating the need to repurpose PC6.

32.768KHz PCB Layout Note

In order to reduce crystal loop currents from coupling through the ground plane to layer 1, Ember recommends the crystal shunt capacitors, C9 and C10 to share a ground via and to be geographically located close to each other and to Y2, thereby keeping loop current paths as short as possible.

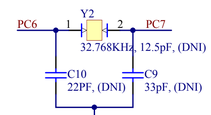

RF 1V8 PCB Layout Note

Keep 1V8 trace between EM358x RF pins 5 and 8, ceramic balun DC Bias pin 2 and all attached decoupling, as short as possible on a single [illegible]

Decoupling for the RF 1V8 trace should be placed close to the ceramic balun DC Bias pin 2.

RF Tuning Circuit

L4 is required for impedance matching between the EM358x and the RF Front End circuit. Changes in PCB layout between the EM358x and the RF Front End will result in a value other than shown here.

24MHz Clock Source

Refer to the tables in Appendix B of this schematic for a list of 24MHz crystal manufacturer part numbers known to work with the EM358x in compliance with the IEEE 802.15.4 symbol rate +/- 40 PPM specification.

Digital Power

Using R1 isolates the digital switching noise from the analog VDD nets. This isolation improves RX by 2dB when compared with not using the resistor.

The CIB token, TOKEN_MFG_SYNTH_FREQ_OFFSET, can be utilized at manufacturing test to compensate for variations of 24 MHz frequencies between radios. Refer to Application Note AN710, Bringing Up Custom Devices for the EM358x SOC Platform, for setting the CIB tokens. Consult the crystal manufacturer for the best target frequency offset to compensate for temperature and aging variations.

24MHz PCB Layout Note

In order to reduce crystal loop currents from coupling through the ground plane to layer 1, Ember recommends the crystal shunt capacitors, C11 and C12 to share a ground via and to be geographically located close to each other and to Y1, thereby keeping loop current paths as short as possible.

EM358x PCB Layout Note

Proper spacing and dimensions of the key elements which make up the EM358x PCB footprint, including a 9 via grid to provide adequate connectivity to the ground plane while maintaining thermal continuity during SMT reflow, are critical to designing for successful manufacturability.
1. Refer to section 6.1.1, "QFN48 Footprint Recommendations", in the EM358x datasheet for PCB footprint mechanical details, which include the Pastemask and Soldermask layer critical dimensions.
2. For optimal noise suppression on VDD nets, each decoupling capacitor should be placed as close to its VDD pin as possible.
3. To further optimize noise suppression, route serially from the VDD source trace/via to the pad for the decoupling capacitor, then to the EM358x VDD pad.
4. Do not share ground vias between decoupling capacitors (note exception for crystal circuits).
5. Star route 1V8 target power pins from the EM358x VREG_OUT to take advantage of inductive filtering characteristics of copper traces.
6. Keep ground plane pours away from the EM358x top layer circuit.
7. Avoid creating ground "islands" in the ground plane layer.
8. Avoid routing traces between the component thermal ground vias.
9. Do not use thermals for the vias under the EM358x or the FEM.

Ceramic Balun PCB Layout Notes

Duplicate as closely as possible all aspects of the Ceramic Balun Circuit PCB layout provided in the reference design .PcbDoc file and gerbers. Proper spacing and placement of key elements which make up the Ceramic Balun Circuit are necessary for successful manufacturability and for optimal RF performance. Key considerations include spacing of the balun from the EM358x, associated trace widths, ground plane layer to signal layer spacing, DC supply routing and via placement.

PCB Only

The symbols below list the PCB in the Bill of Materials and are used for identifying PCB silk screen and mechanical layer Logos within the Silicon Labs CAD tools. They are not required or intended for use in customer designs.

Top Side Board Logo | Bottom Side Board Logo | Company Logo

0805 Zigbee Front End Ceramic Balun

The Ceramic Balun Reference Design incorporates a 100 ohm differential port with DC bias, to 50 ohm single ended port, ceramic balun in a standard 0805 package. An impedance tuning inductor, DC bias decoupling capacitor and harmonic filter are required elements in this design.

Recomended Ceramic Balun Options

Balun Manufacturer	Balun Part Number	L4 Tuning Inductor
WURTH ELEKTRONIC	748421245	TBD
WURTH ELEKTRONIC	748420245	TBD
JOHANSON	2450BL15B100E	TBD
MURATA	LDB212G4010C-001	TBD
TDK	HHM1520	TBD

Firmware Considerations

1. Refer to the EM358x Reference Manual, chapter 7, for GPIO configuration information.
2. Refer to Application Note AN710, Bringing Up Custom Devices for the EM358x SOC Platform, for setting the CIB tokens.
3. Set TOKEN_MFG_PHY_CONFIG value to FE to enable the correct RF path and RX Boost mode for this reference design.

RF Test Port (Optional)

An RF test port is required for characterization testing and tuning of the radio and antenna circuits.

RF Test Port Configuration Table

Mode	R3	R7	R8
Normal	DNI	DNI	0 ohm
Radio	DNI	0 ohm	DNI
Antenna	0 ohm	DNI	DNI

Antenna Interface (Optional)

AT1 is a custom 'inverted F' variant PCB antenna and can be replaced by any other 802.15.4 capable antenna or RF test connector interface.

L1, L3 and L5 are intended for impedance matching of the 50 ohm RF track to the antenna and may require an adjustment of component values on PCB layouts which have any differences from this design.

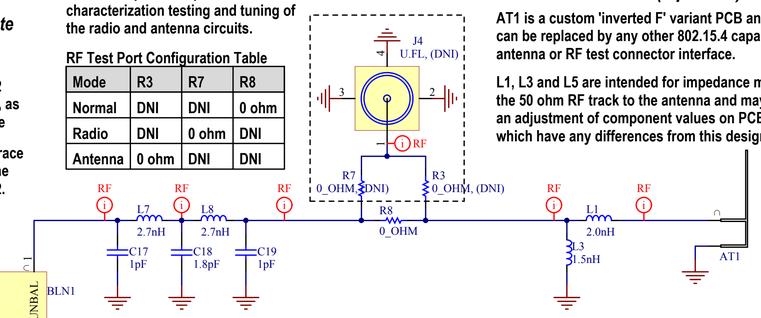

Harmonic Filter (Optional)

C17, C18, C19, L7, L8 make up a 5 element Harmonic filter which maximizes the conducted 2nd and 3rd order 802.15.4 band Harmonic margin for compliance with applicable governing regulatory requirements. Can be replaced with other types of filters, such as a ceramic band pass filter. Performance is sensitive to PCB parasitic impedances, therefore custom PCB layout should emulate the reference PCB layout attached to this design as closely as possible.

EM358x USB Application Circuit - (Optional)

When USB is implemented, VBRD must always be equal to or greater than 3.0 volts.

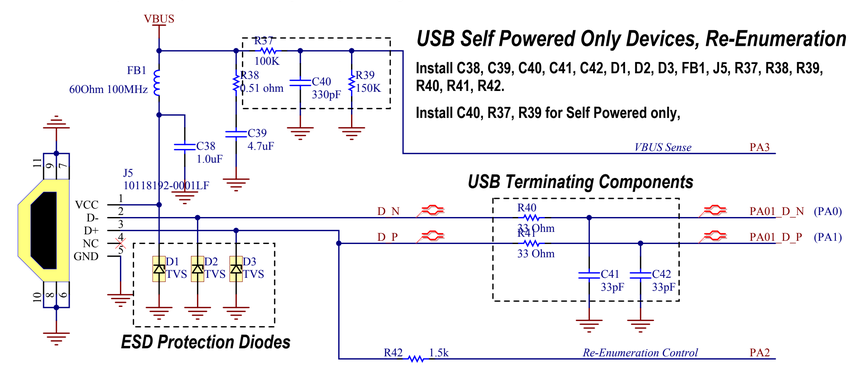

R42 is required to enable the firmware to re-enumerate after deep sleep, a device Reset or a power cycling event.

USB PCB Layout Notes

1. Minimize trace lengths of the differential signals D+, D-.
2. Differential signal traces should be differentially impedance matched to 90 ohms.
3. Differential signals should have matching trace lengths.
4. Keep differential signal traces over the plane area of the ground plane layer.
5. Minimize the use of vias and corners when routing the differential signal traces.
6. If a 90 degree angle is necessary, use arcs or two 45 degree angles instead.
7. Keep differential signal traces isolated from any clock or similarly switching signals.
8. Follow rule of thumb keep-out by minimally maintaining 5 times trace width from all unrelated copper planes and traces.
9. Route terminating component pads in line or on top of the differential signal traces thereby avoiding trace stubs.
10. Differential signal termination components, C41, C42, R40, R41, should be placed as close as possible to the EM358x.
11. ESD and VBUS filter components should be placed as close as possible to the USB connector.

EM358x USB Bus Powered Only Devices, Re-Enumeration

Install the Self Powered Only Circuit shown above, except for C40, R37, R39, and install the voltage regulator circuit, C43, C44, C45 and U3 shown below. C40, R37, R39 are not required for VBUS powered modules and should not be installed to prevent a potential power race condition on PA3.

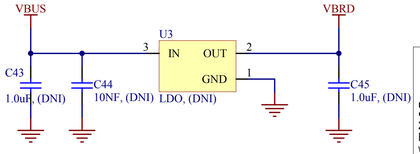

SILICON LABS
25 Thomson Place, 2nd Floor
Boston, MA 02210, USA
www.silabs.com
617-951-0200

The information in this document is subject to change without notice. The statements, configurations, technical data and recommendations in this document are believed to be accurate and reliable, but are presented without express or implied warranty. The information in this document is the proprietary and confidential property of Silicon Laboratories Inc., and is privileged. No part of the drawing or information may be duplicated or otherwise used without the express permission of Silicon Laboratories Inc.

MCU & Wireless Division Simplicity Support Group	
Title: EM358x/0805 Ceramic Balun W/USB Reference Design	
Part Number:	Rev: A0
Sheet Name: EM358x_REF_DES_CER_USB_INV-F_Main.SchDoc	
Date: 4/2/2014 Time: 3:29:08 PM Sheet: 3 of 5	Size: C

Appendix A: Approved Serial Flash Providers for the EM358x/0805 Ceramic Balun Front End 4-Layer Reference Design

The table below provides details for Serial Flash devices intended for this Reference Design. For a complete list of Serial Dataflash devices supported by the Silicon Labs ZigBee software stack, refer to the Table 2. Supported Serial Dataflash/EEPROM Remote Memory Parts, in Application Note AN772, Using Application Bootloader.

Table 1: Silicon Labs Zigbee Serial Flash Vendor Parts List

Manufacturer	Part Number	Description	Software Driver
WinBond	W25X20BVSNIG	2M (256K x 8)	spiflash-class1.c
WinBond	W25Q80BVSNIG	8M (256K x 32)	spiflash-class1.c
Macronix	MX25L2006EM1I-12G	2M (2M x 1, 1M x 2)	spiflash-class1.c
Macronix	MX25L8006EM1I-12G	8M (8M x 1, 4M x 2)	spiflash-class1.c

Appendix B: Suggested 24MHz Crystal Providers for the EM358x/0805 Ceramic Balun Front End 4-Layer Reference Design

The tables below provide details for 24MHz crystal devices which can be used with EM358x series ZigBee products for the manufacture of ZigBee radio devices. Check with your preferred crystal vendor for the latest updates on their product offering or for additional information about crystals for the EM358x ZigBee products in your target application.

Table 2: Suggested 24MHz ZigBee Crystal Vendor Parts List for Crystal Packages Used in this design

Manufacturer	Part Number	Package Size	Frequency Tol	Temperature Stability	Aging	Total Frequency Tol	ESR	Load Capacitance	Tuning Capactor
Abracon	ABLS-24.000MHZ-D1X-T	HC/49US (AT49)	+/- 10 ppm	+/- 20ppm (-40 +85)	+/- 10 ppm/5 years		40 ohms		
Abracon	ABLS-24.000MHZ-D-R60-1-W-T	HC/49US (AT49)	+/- 10 ppm	+/- 15ppm (-40 +85)	+/-5 ppm/year		60 ohms	18pF	22pF
Abracon	ABLS-438-24.000MHZ-T	HC/49US (AT49)	+/- 10 ppm	+/- 15ppm (-40 +85)	+/-15 ppm/20 years		40 ohms	18pF	22pF
ILSI	HC49USM-24.000000M-2435	HC49US	+/- 10 ppm	(-40 +85)			30 ohms	18pF	
AEL	X24M000000S067	HC49S SM	+/- 10 ppm @25C	+/- 25ppm (-40 +105)	+/- 3 ppm/year max		80 ohms	10pF	

Table 3: Suggested 24MHz ZigBee Crystal Vendor Parts List for High Temperature Rated Crystals Having Alternate Package/PCB Dimensions than is Used in this Design

Manufacturer	Part Number	Package Size	Frequency Tol	Temperature Stability	Aging	Total Frequency Tol	ESR	Load Capacitance	Tuning Capactor
Abracon	ABM8X-101-24.000MHZ	3.2 x 2.5 x 0.7mm	+/- 10 ppm	+/- 25 ppm (-40 +125)	+/- 5 ppm/10 years	+/- 40 ppm (-40 +125)/10 years max	60 ohms	10pF	6.8pF
Abracon	ABM3Y-101-24.000MHZ-T	5.0 X 3.2 X 0.9mm	+/- 10 ppm	+/- 25 ppm (-40 +105)	+/- 10 ppm/5 years		30 ohms	10pF	
AEL	X24M000000S037	3.2 x 2.5 x 0.6mm	+/- 10 ppm @25C	+/- 25 ppm (-40 +105)	+/- 3 ppm/year max		80 ohms	10pF	
EPSON	TSX-3225 24.0000MF20G-C	3.2 x 2.5 x 0.6mm	+/- 10 ppm	+/- 20 ppm (-40 +105)	+/- 1 ppm/First year Max @ +25		60 ohms	18pF	
ILSI	ILCX07-24.000000M-2390	5.0 X 3.2 X 1.30mm		(-40 +105)			60 ohms	18pF	
ILSI	ILCX07-24.000000M-2392	3.2 x 2.5 x 0.9mm		(-40 +105)			60 ohms	18pF	

Table 4: Suggested 24MHz ZigBee Crystal Vendor Parts List for Commercial and Industrial Rated Crystals Having Alternate Package/PCB Dimensions than is Used in this Design

Manufacturer	Part Number	Package Size	Frequency Tol	Temperature Stability	Aging	Total Frequency Tol	ESR	Load Capacitance	Tuning Capactor
Abracon	ABM8-24.000MHZ-R60-D-1-W-T	3.2 x 2.5 x 0.7mm	+/- 10 ppm	+/- 25 ppm (-40 +85)	+/- 3 ppm/First year max @ +25		60 ohms	18pF	22pF
Abracon	ABM8-24.000MHZ-R60-D-1-G-T	3.2 x 2.5 x 0.7mm	+/- 10 ppm	+/- 15 ppm (-40 +85)	+/- 3 ppm/First year max @ +25		60 ohms	18pF	22pF
Abracon	ABM8-177-24.000mHz	3.2 x 2.5 x 0.7mm	+/- 10 ppm	+/- 15 ppm (-40 +85)	+/- 15 ppm/20 years		60 ohms	18pF	22pF
AEL	X24M000000S050	3.2 x 2.5 x 0.6mm	+/- 10 ppm @25C	+/- 25 ppm (-40 +85)	+/- 3 ppm/year max		60 ohms	10pF	8.2pF
AEL	X24M000000S058	3.2 x 2.5 x 0.6mm	+/- 10 ppm @25C	+/- 15 ppm (-40 +85)	+/- 15 ppm/20 years max		60 ohms	10pF	
EPSON	TSX-3225 24.0000MF18X-C 18pF	3.2 x 2.5 x 0.7mm	+/- 10 ppm	+/- 18 ppm	+/- 1 ppm/First year max @ +25		60 ohms	18pF	27pF
ILSI	ILCX13-24.000000M-2391	3.2 x 2.5 x 0.6mm		(-40 +85)			60 ohms	18pF	
ILSI	ILCX07-24.000000M-2389	5.0 X 3.2 X 1.30mm		(-40 +85)			60 ohms	18pF	
KDS	1ZCA24000ZZ0C	2.5 x 2.0 x 0.75mm				+/- 40 ppm (-40 +105)/10 years max	80 ohms	18pF	
KDS	1ZC224000ZZ0G	3.2 x 2.5 x 0.75mm				+/- 40 ppm (-40 +105)/10 years max	60 ohms	18pF	
KDS	1C324000ZZ0D	3.2 x 2.5 x 0.75mm				+/- 40 ppm (-40 +105)/10 years max	60 ohms	18pF	
KDS	1ZCB24000ZZ0B	2.5 x 2.0 x 0.75mm				+/- 40 ppm (-40 +105)/10 years max	60 ohms	18pF	
Precision Devices, Inc.	C324000XFAD13RX	3.2 x 2.5 x 0.7mm	+/- 10 ppm	+/- 20 ppm (-40 +70)	+/- 5 ppm/over life of the part		60 ohms	13pF	15pF
Partron America Corp	CX5X24000FHVRG01	3.2 x 2.5 x 0.75mm	+/- 10 ppm	+/- 15 ppm (-40 +85)	+/- 2 ppm/ year @ +25		60 ohms	18pF	27pF
Suntsu	SCM18D48-24.000MHZ	3.2 x 2.5 x 0.65mm	+/- 10 ppm	+/- 15 ppm (-40 +85)	+/- 2 ppm/1st Year max, then +/- 1ppm/year		80 ohms	18pF	22pF
TXC Technology	7B-24.000MEEQ-T	5.0 X 3.2 X 1.30mm	+/- 10 ppm	+/- 10 ppm (-40 +85)	+/- 3 ppm/year max		40 ohms	18pF	
TXC Technology	7M-24.000MEEQ-T	3.2 x 2.5 x 0.7mm	+/- 10 ppm	+/- 10 ppm (-40 +85)	+/- 3 ppm/year max		60 ohms	18pF	

SILICON LABS
25 Thomson Place, 2nd Floor
Boston, MA 02210, USA
www.silabs.com
617-951-0200

MCU & Wireless Division Simplicity Support Group
The information in this document is subject to change without notice. The statements, configurations, technical data and recommendations in this document are believed to be accurate and reliable, but are presented without express or implied warranty. The information in this document is the proprietary and confidential property of Silicon Laboratories Inc., and is privileged. No part of the drawing or information may be duplicated or otherwise used without the express permission of Silicon Laboratories Inc.

EM358x_REF_DES_CER_USB_INV-F

Schematic Notes:

-- Version A0--
***Released: March 28, 2014**
***Intial Release Version, Version A0**

PCB Layout Notes:

-- Version A0--
***Released: March 28, 2014**
***Intial Release Version, Version A0**

SILICON LABS
25 Thomson Place, 2nd Floor
Boston, MA 02210, USA
www.silabs.com
617-951-0200

MCU & Wireless Division Simplicity Support Group

The information in this document is subject to change without notice. The statements, configurations, technical data and recommendations in this document are believed to be accurate and reliable, but are presented without express or implied warranty. The information in this document is the proprietary and confidential property of Silicon Laboratories Inc., and is privileged. No part of the drawing or information may be duplicated or otherwise used without the express permission of Silicon Laboratories Inc.

Title: EM358x/0805 Ceramic Balun W/USB Reference Design			
Part Number:	Rev: A0		
Sheet Name: EM358x_REF_DES_CER_USB_INV-F_Rev_Notes.SchDoc			
Date: 4/2/2014	Time: 3:29:09 PM	Sheet: 5 of 5	Size: C