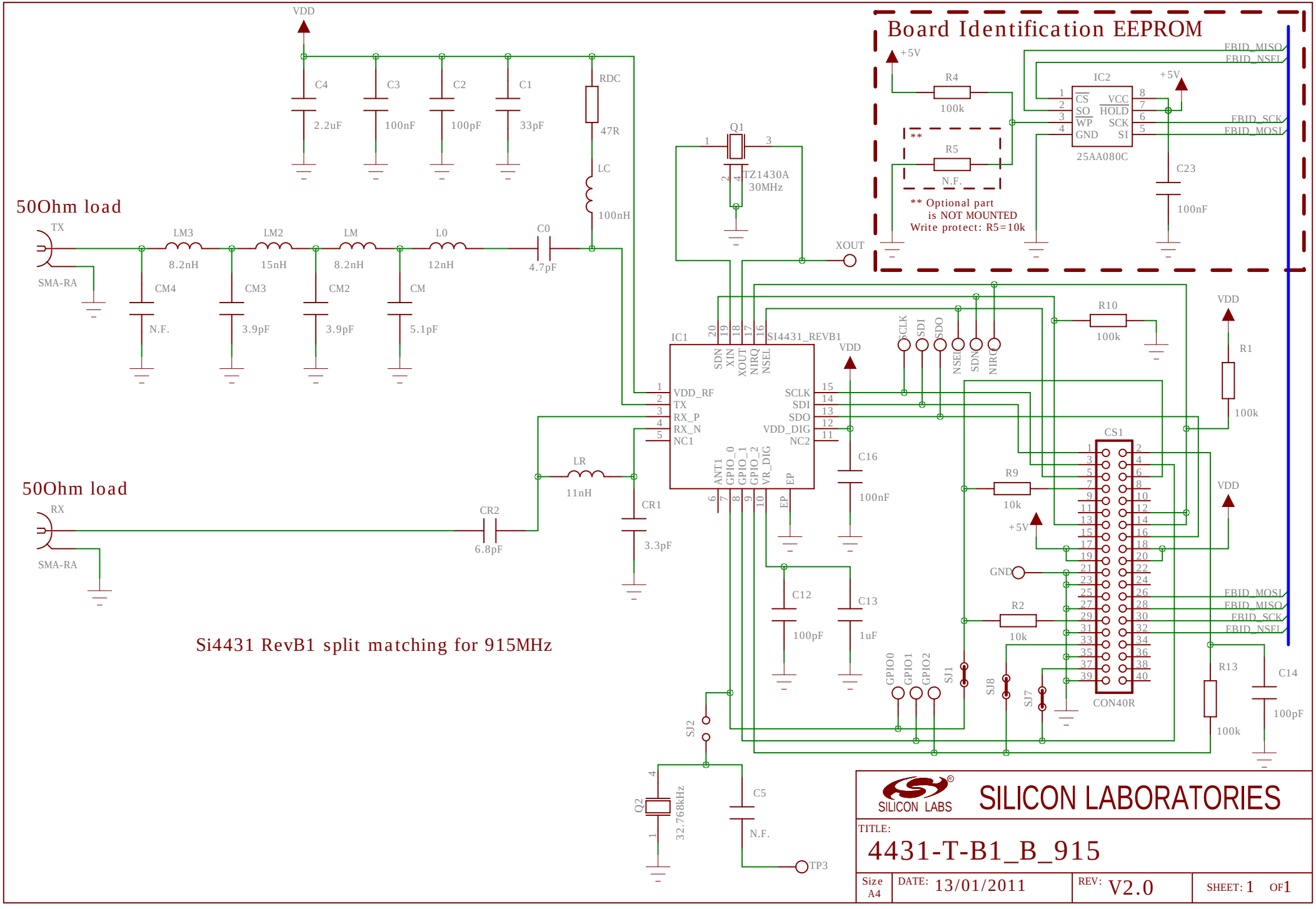

Board Identification EEPROM
+5V
R4
100k
R5
N.F.
**
** Optional part
is NOT MOUNTED
Write protect: R5=10k
IC2
CS
SO
WP
GND
VCC
HOLD
SCK
SI
25AA080C
C23
100nF
EBID_MISO
EBID_NSEL
EBID_SCK
EBID_MOSI
VDD
C4
2.2uF
C3
100nF
C2
100pF
C1
33pF
RDC
47R
LC
100nH
Q1
TZ1430A
30MHz
XOUT
50Ohm load
TX
SMA-RA
LM3
8.2nH
LM2
15nH
LM
8.2nH
L0
12nH
C0
4.7pF
CM4
N.F.
CM3
3.9pF
CM2
3.9pF
CM
5.1pF
IC1
SI4431_REVB1
SDN
XIN
XOUT
NIRQ
NSEL
VDD_RF
TX
RX_P
RX_N
NC1
SCLK
SDI
SDO
VDD_DIG
NC2
ANT1
GPIO_0
GPIO_1
GPIO_2
VR_DIG
EP
R10
100k
R1
100k
CS1
CON40R
R9
10k
R2
10k
GND
C16
100nF
C12
100pF
C13
1uF
LR
11nH
CR1
3.3pF
CR2
6.8pF
50Ohm load
RX
SMA-RA
Si4431 RevB1 split matching for 915MHz
GPIO0
GPIO1
GPIO2
SJ1
SJ8
SJ7
R13
100k
C14
100pF
SJ2
Q2
32.768kHz
C5
N.F.
TP3
SILICON LABS
SILICON LABORATORIES
TITLE:
4431-T-B1_B_915
Size
A4
DATE: 13/01/2011
REV: V2.0
SHEET: 1 OF1