PG23 Pro Kit

Board Function	Page
Title Page	1
User Interface	2
Signal Assignments	3
EFM32 Power	4
EFM32 I/O	5
Segment LCD	6
Target Voltage Supply	7
AEM & Voltage Sense	8
Debug Interface	9
Simplicity & VCOM	10
Power	11
Board Controller	12
Board Controller Misc	13

Revision History

Rev.	Description
A00	Initial version.

PCB1

PCB2504A

LEGAL NOTICE:
SILICON LABORATORIES INC. ("SILICON LABS") AND/OR ITS LICENSORS DO NOT WARRANT THE ACCURACY OR COMPLETENESS OF THIS SCHEMATIC OR ANY INFORMATION CONTAINED WITHIN THIS SCHEMATIC. IT IS PROVIDED "AS-IS" FOR REFERENCE ONLY. SILICON LABS DOES NOT WARRANT THAT THIS DESIGN WILL MEET THE SPECIFICATIONS, BE SUITABLE FOR YOUR APPLICATION OR FIT FOR ANY PARTICULAR PURPOSE, OR WILL OPERATE IN YOUR IMPLEMENTATION. SILICON LABS AND ITS LICENSORS DO NOT WARRANT THAT THE DESIGN IMPLIED IN THIS SCHEMATIC IS PRODUCTION-WORTHY. YOU SHOULD COMPLETELY VALIDATE AND TEST YOUR DESIGN IMPLEMENTATION TO CONFIRM SYSTEM FUNCTIONALITY FOR YOUR APPLICATION.

Designed: MAH	Approved: RGU
Size: A3	Sheet Modified Date: Tuesday, March 09, 2021
Board Name	EFM32PG23 Pro Kit
Page Title	Title Page
Board Number	BRD2504A
Revision	A00
Sheet	1 of 13

COPYRIGHT SILICON LABORATORIES INC. 2021 CONFIDENTIAL – SUBJECT TO TERMS OF USE

Push Buttons

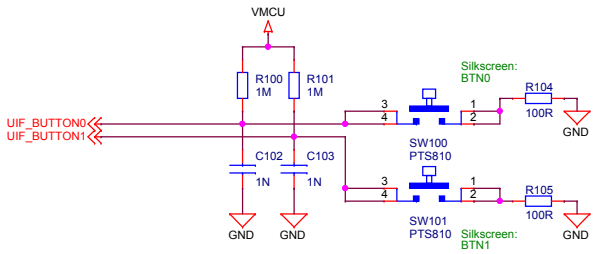

LEDs

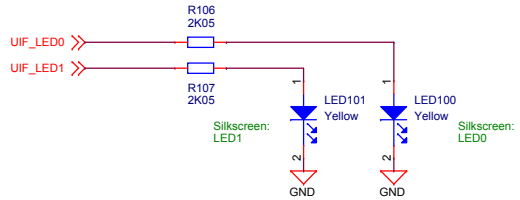

LESENSE LC-Sensor

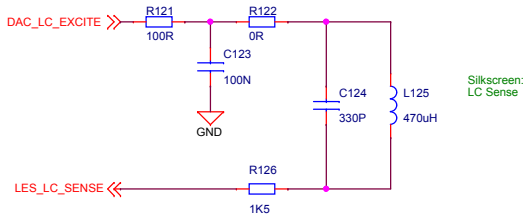

Relative Humidity & Temperature Sensor

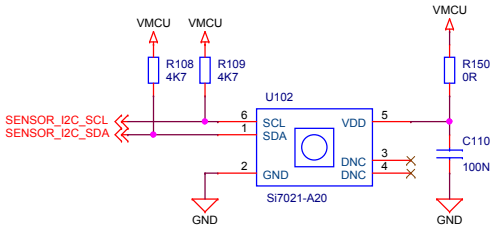

SMA Connector

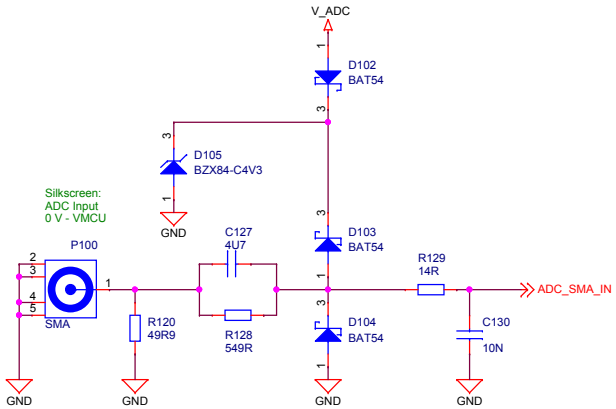

ADC VREF

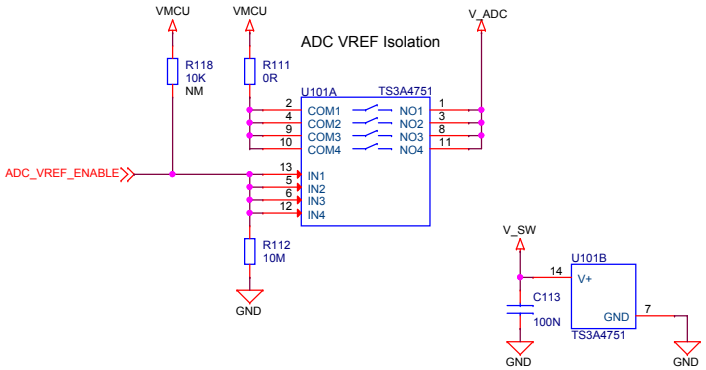

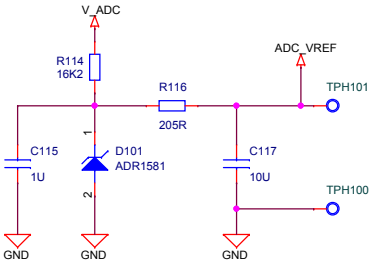

Breakout Pads

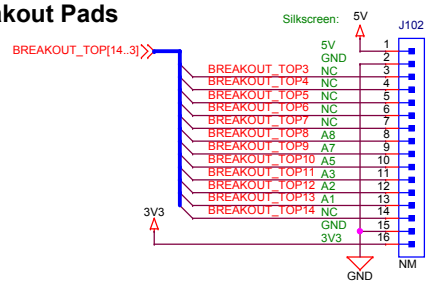

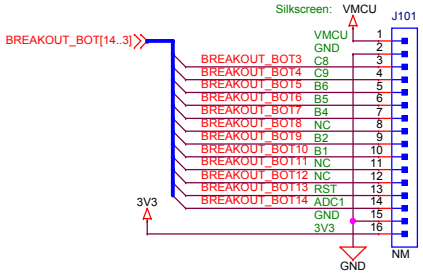

EXP Header

EXP Header Functionality

Top Row

2	VMCU	
4	NC	
6	NC	
8	NC	
10	NC	
12	PB5	UART_TX
14	PB6	UART_RX
16	PA7	I2C_SDA
18	5V	
20	3V3	

Bottom Row

1	GND	
3	ADC1	
5	NC	
7	NC	
9	PA5	GPIO
11	PB4	GPIO
13	PC9	GPIO
15	PA8	I2C_SCL
17	Reserved for EXP Board Identification	
19	Reserved for EXP Board Identification	

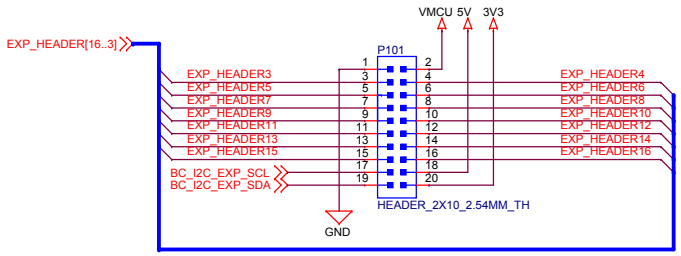

SILICON LABS

Designed	MAH
Approved	RGU
Size	A3
Sheet Modified Date	Tuesday, March 09, 2021
Board Name	EFM32PG23 Pro Kit
Page Title	User Interface
Board Number	BRD2504A
Revision	A00
Sheet	2 of 13

COPYRIGHT SILICON LABORATORIES INC. 2021 CONFIDENTIAL – SUBJECT TO TERMS OF USE

PA Connections

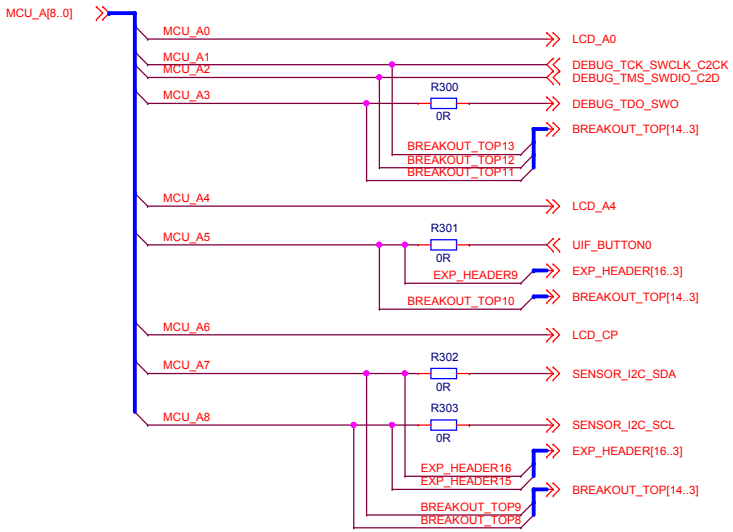

PB Connections

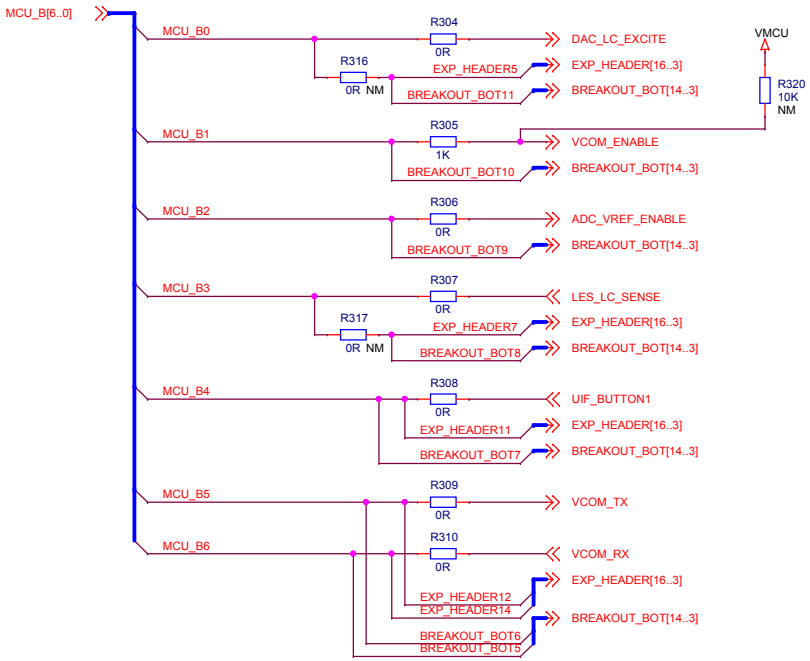

PC Connections

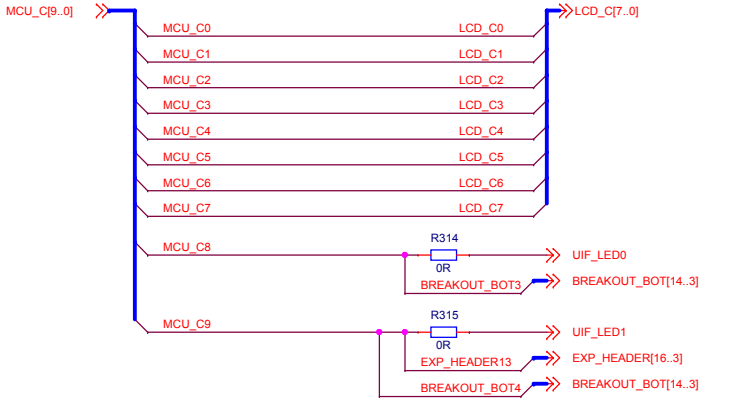

PD Connections

ADC Connections

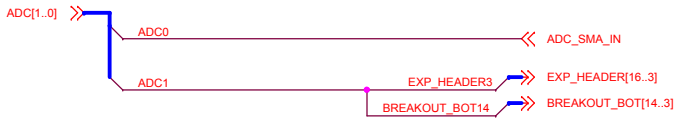

SILICON LABS	Board Name: **EFM32PG23 Pro Kit**	
	Page Title: **Signal Assignments**	
Designed: MAH / Approved: RGU	Board Number: **BRD2504A**	Revision: **A00**
Size: A3 / Sheet Modified Date: Tuesday, March 09, 2021		Sheet: 3 of 13

COPYRIGHT SILICON LABORATORIES INC. 2021 CONFIDENTIAL – SUBJECT TO TERMS OF USE

EFM32 Power and Decoupling

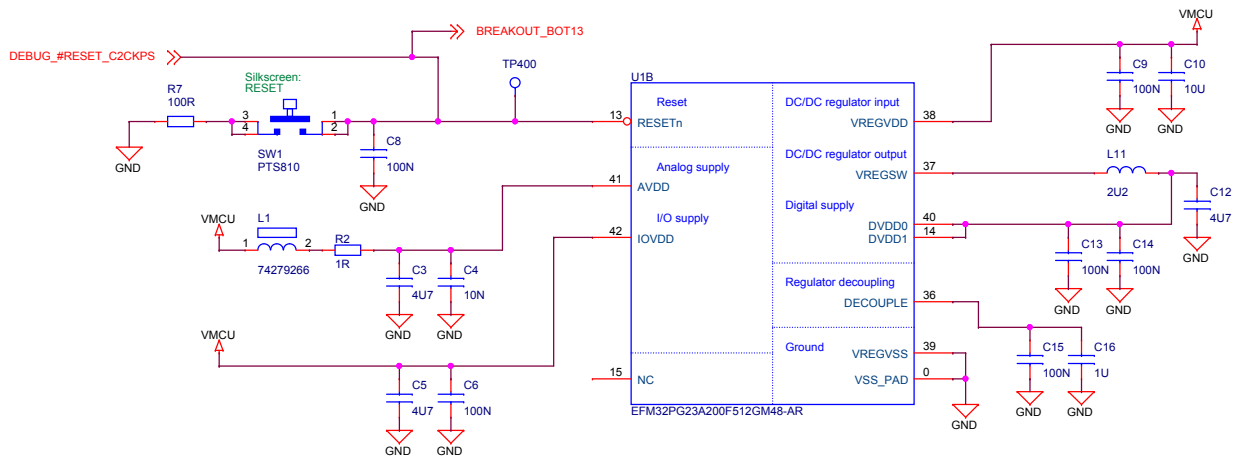

Power Select Switch: AEM/BAT

SWITCH POS	MODE DESCRIPTION
AEM	AEM Enabled, VMCU sourced from external 3.3V LDO powered by BC USB 5V supply
BAT	AEM Disabled, VMCU sourced from coin-cell battery or external power supply

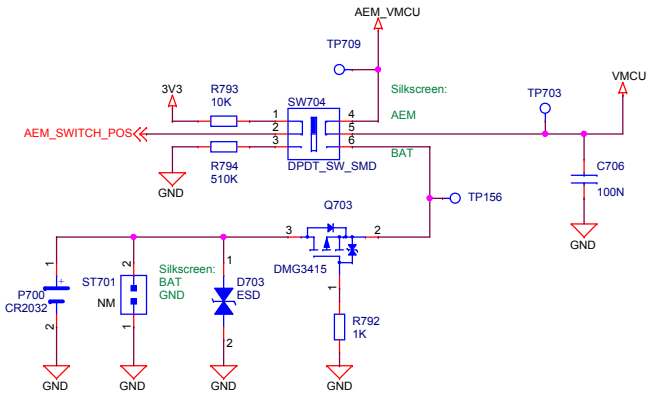

Board Name	EFM32PG23 Pro Kit
Page Title	EFM32 Power
Designed	MAH
Approved	RGU
Size	A3
Sheet Modified Date	Wednesday, March 10, 2021
Board Number	BRD2504A
Revision	A00
Sheet	4 of 13

COPYRIGHT SILICON LABORATORIES INC. 2021 CONFIDENTIAL – SUBJECT TO TERMS OF USE

EFM32 MCU

High Frequency Clock

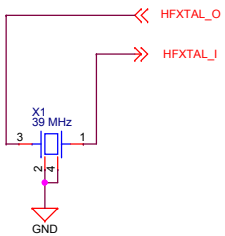

Low Frequency Clock

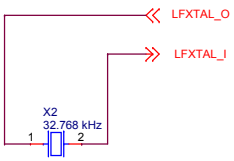

SILICON LABS	Board Name: **EFM32PG23 Pro Kit**	
	Page Title: **EFM32 I/O**	
Designed: MAH / Approved: RGU	Board Number: **BRD2504A**	Revision: **A00**
Size: A3 / Sheet Modified Date: Wednesday, March 10, 2021		Sheet: 5 of 13

COPYRIGHT SILICON LABORATORIES INC. 2021 CONFIDENTIAL – SUBJECT TO TERMS OF USE

Segment LCD Signal Connections

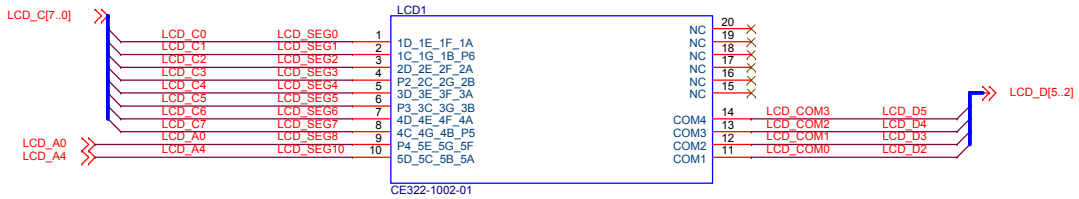

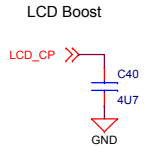

Segment Names

PIN	1	2	3	4	5	6	7	8	9	10	11	12	13	14	15	16	17	18	19	20
COM1	1D	1C	2D	P2	3D	P3	4D	4C	P4	5D	COM1	--	--	--	--	--	--	--	--	--
COM2	1E	1G	2E	2C	3E	3C	4E	4G	5E	5C	--	COM2	--	--	--	--	--	--	--	--
COM3	1F	1B	2F	2G	3F	3G	4F	4B	5G	5B	--	--	COM3	--	--	--	--	--	--	--
COM4	1A	P6	2A	2B	3A	3B	4A	P5	5F	5A	--	--	--	COM4	--	--	--	--	--	--

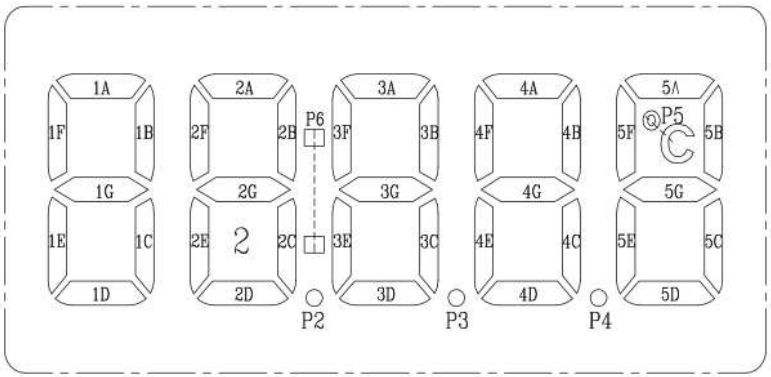

SILICON LABS	Board Name: **EFM32PG23 Pro Kit**	
	Page Title: **Segment LCD**	
Designed: MAH / Approved: RGU	Board Number: **BRD2504A**	Revision: **A00**
Size: A3 / Sheet Modified Date: Tuesday, March 09, 2021		Sheet: 6 of 13

COPYRIGHT SILICON LABORATORIES INC. 2021 CONFIDENTIAL – SUBJECT TO TERMS OF USE

MCU Power Regulator

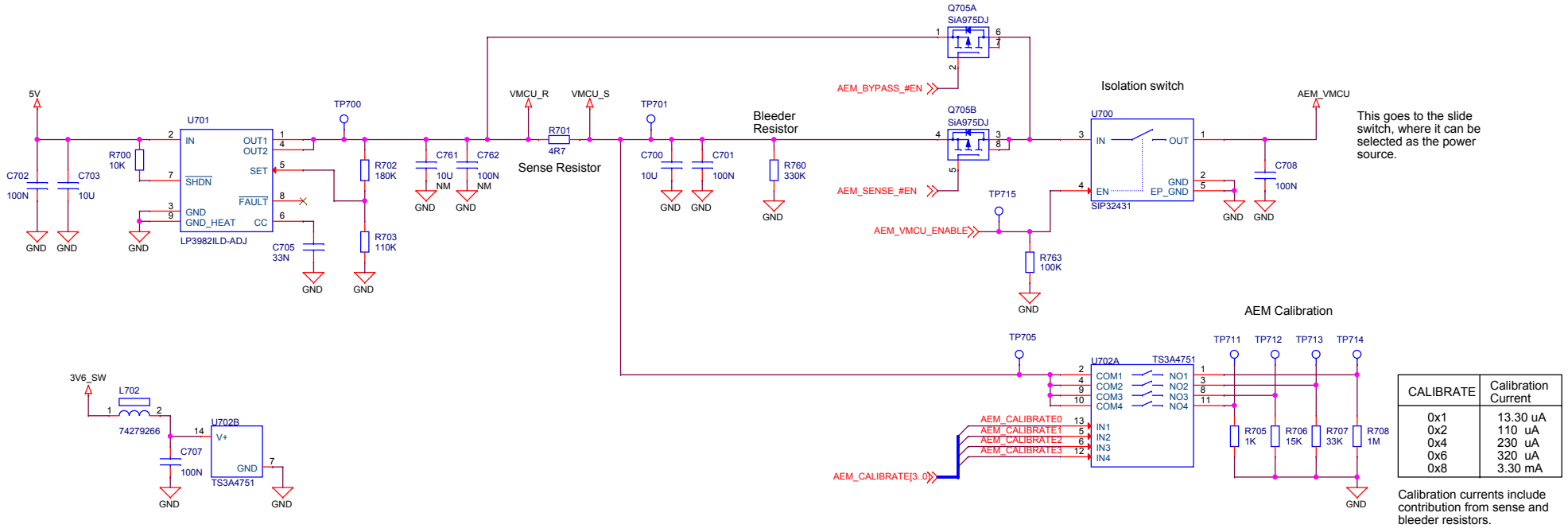

CALIBRATE	Calibration Current
0x1	13.30 uA
0x2	110 uA
0x4	230 uA
0x6	320 uA
0x8	3.30 mA

Calibration currents include contribution from sense and bleeder resistors.

AEM Bypass Control

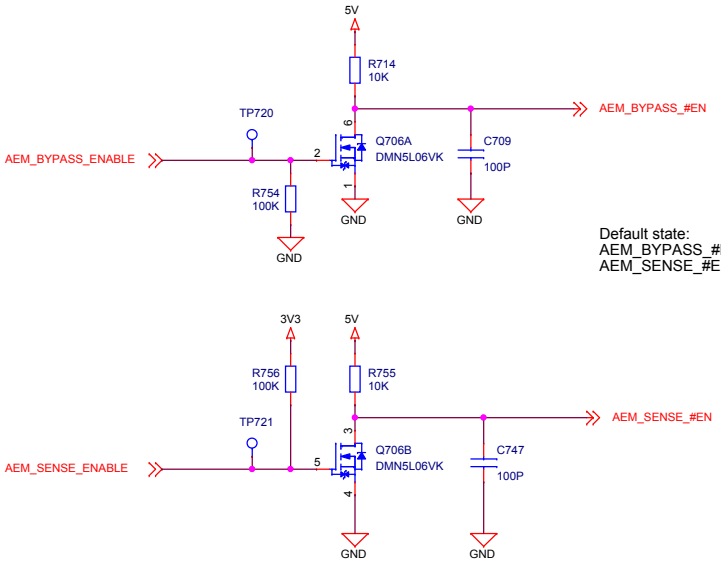

Default state:
AEM_BYPASS_#EN = 1 (AEM bypass not enabled)
AEM_SENSE_#EN = 0 (AEM sense enabled)

SILICON LABS	Board Name: **EFM32PG23 Pro Kit**	
	Page Title: **Target Voltage Supply**	
Designed: MAH / Approved: RGU	Board Number: **BRD2504A**	Revision: **A00**
Size: A3 / Sheet Modified Date: Tuesday, March 09, 2021		Sheet: 7 of 13

COPYRIGHT SILICON LABORATORIES INC. 2021 CONFIDENTIAL – SUBJECT TO TERMS OF USE

MCU Current Sense

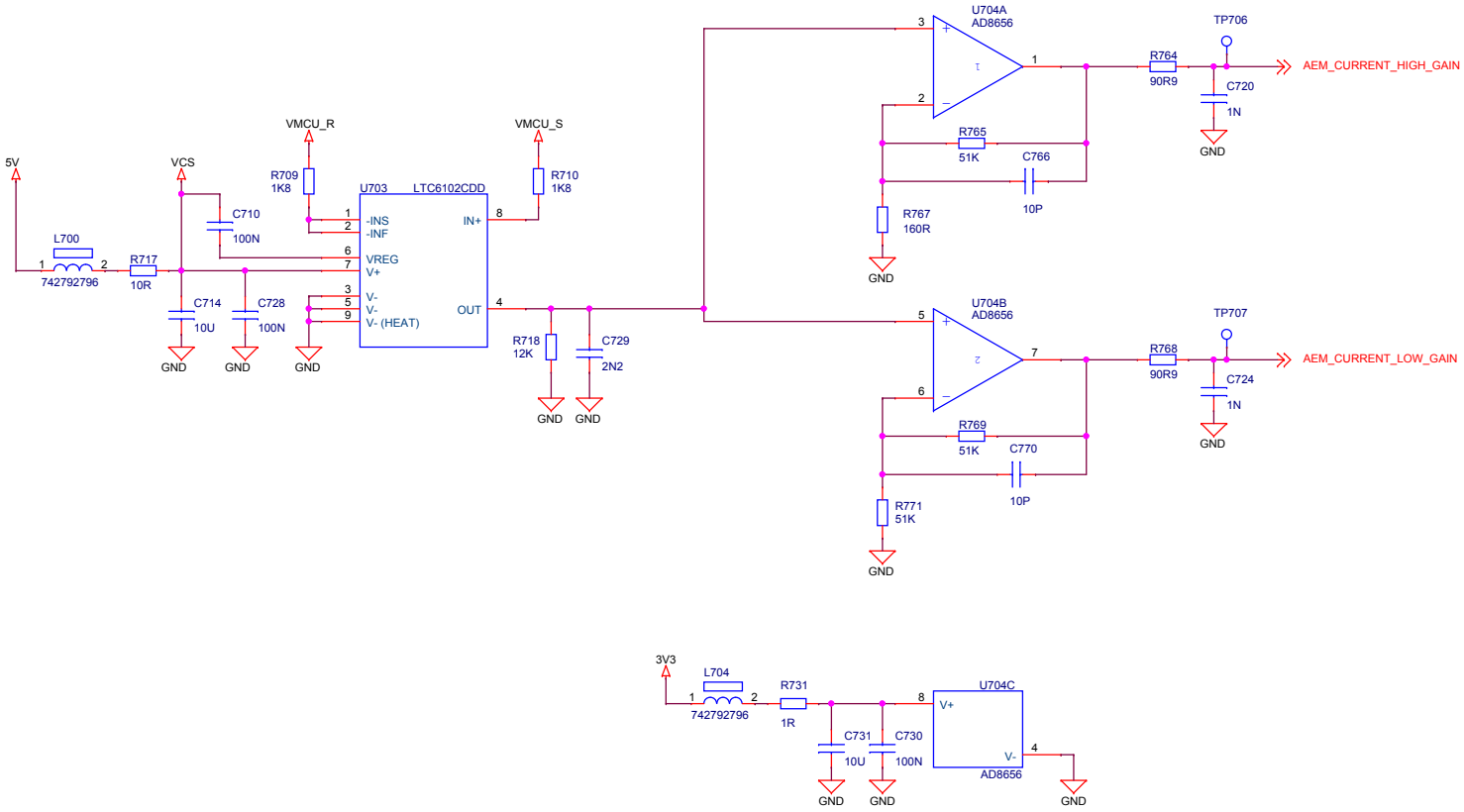

SILICON LABS	Board Name: **EFM32PG23 Pro Kit**	
	Page Title: **AEM**	
Designed: MAH / Approved: RGU	Board Number: **BRD2504A**	Revision: **A00**
Size: A3 / Sheet Modified Date: Tuesday, March 09, 2021		Sheet: 8 of 13

COPYRIGHT SILICON LABORATORIES INC. 2021 CONFIDENTIAL – SUBJECT TO TERMS OF USE

Debug Mux

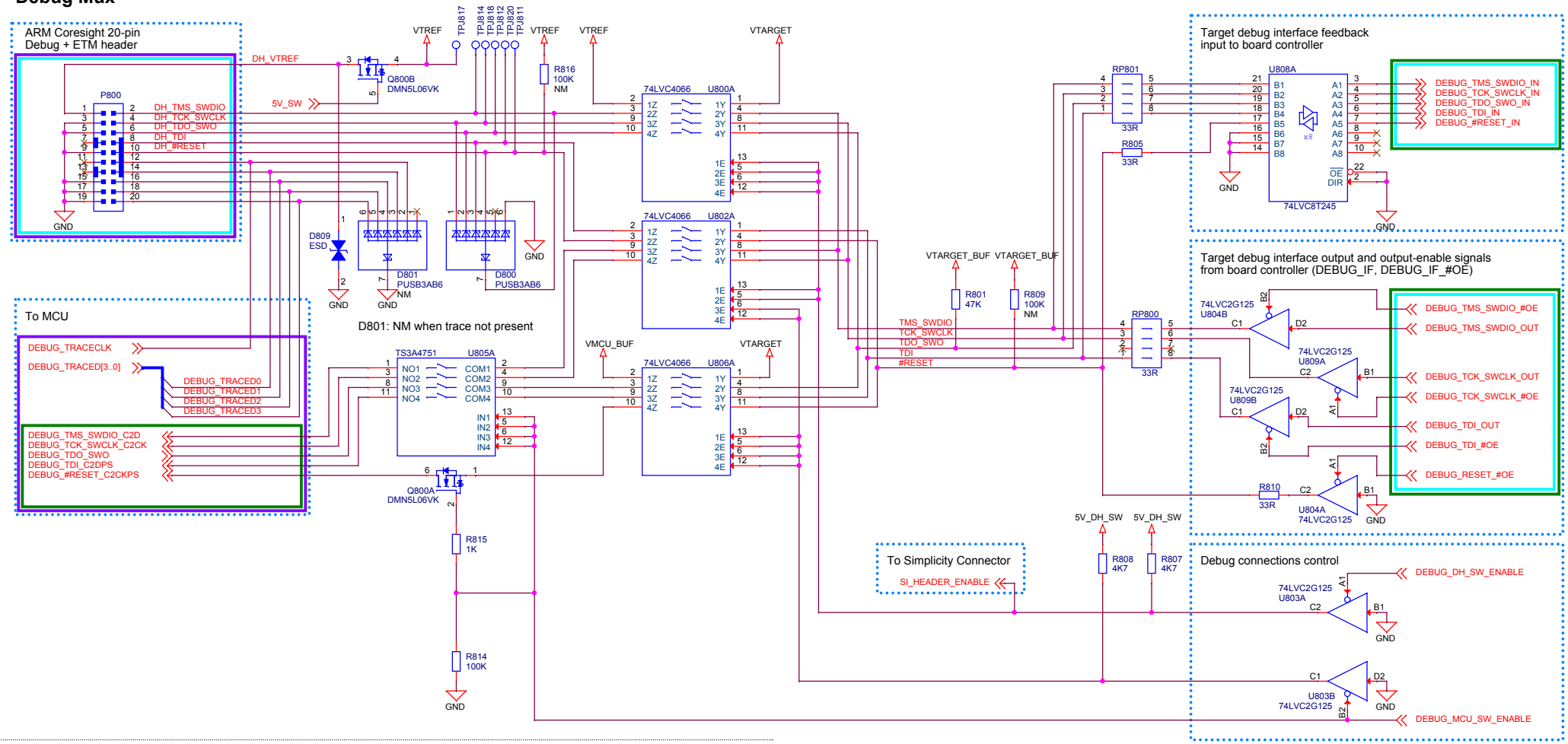

Power & Decoupling

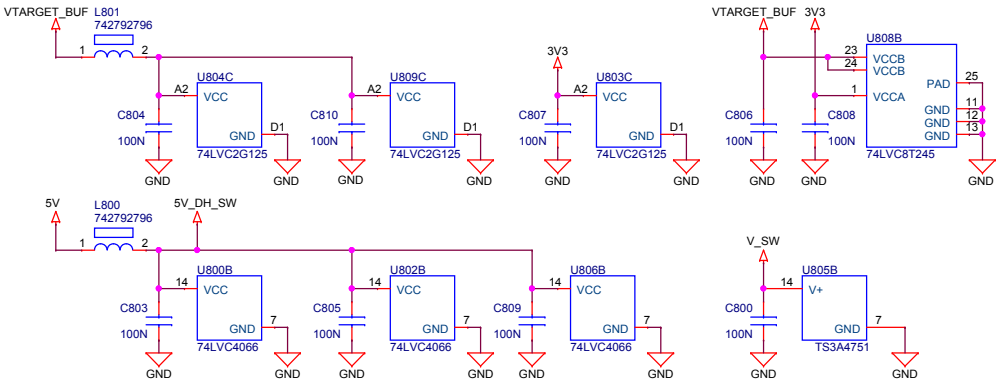

Mode	DEBUG_DH_SW_ENABLE	DEBUG_MCU_SW_ENABLE	DEBUG_IF_#OE	VTREF	VTARGET
Debug Out	1	0	0/1	External voltage	External voltage
MCU Debug	0	1	0/1	Disconnected	VMCU
Debug In	1	1	1	VMCU	VMCU
Debug Off	0	0	1	-	-

Color coded frames indicates which groups of signal nodes that are active in a given debug mode

SILICON LABS

Board Name	EFM32PG23 Pro Kit
Page Title	Debug Interface
Designed	MAH
Approved	RGU
Size	A3
Sheet Modified Date	Tuesday, March 09, 2021
Board Number	BRD2504A
Revision	A00
Sheet	9 of 13

COPYRIGHT SILICON LABORATORIES INC. 2021 CONFIDENTIAL – SUBJECT TO TERMS OF USE

Simplicity Connector

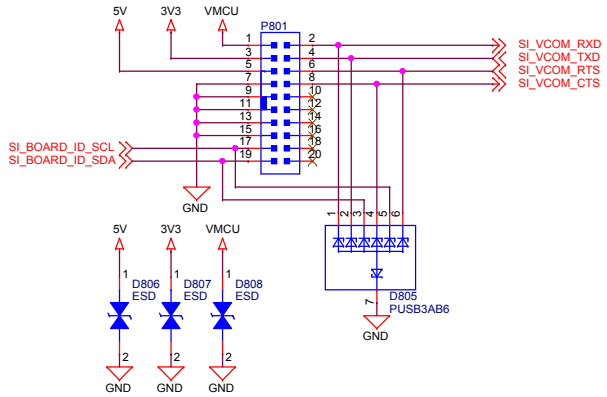

VCOM Interface

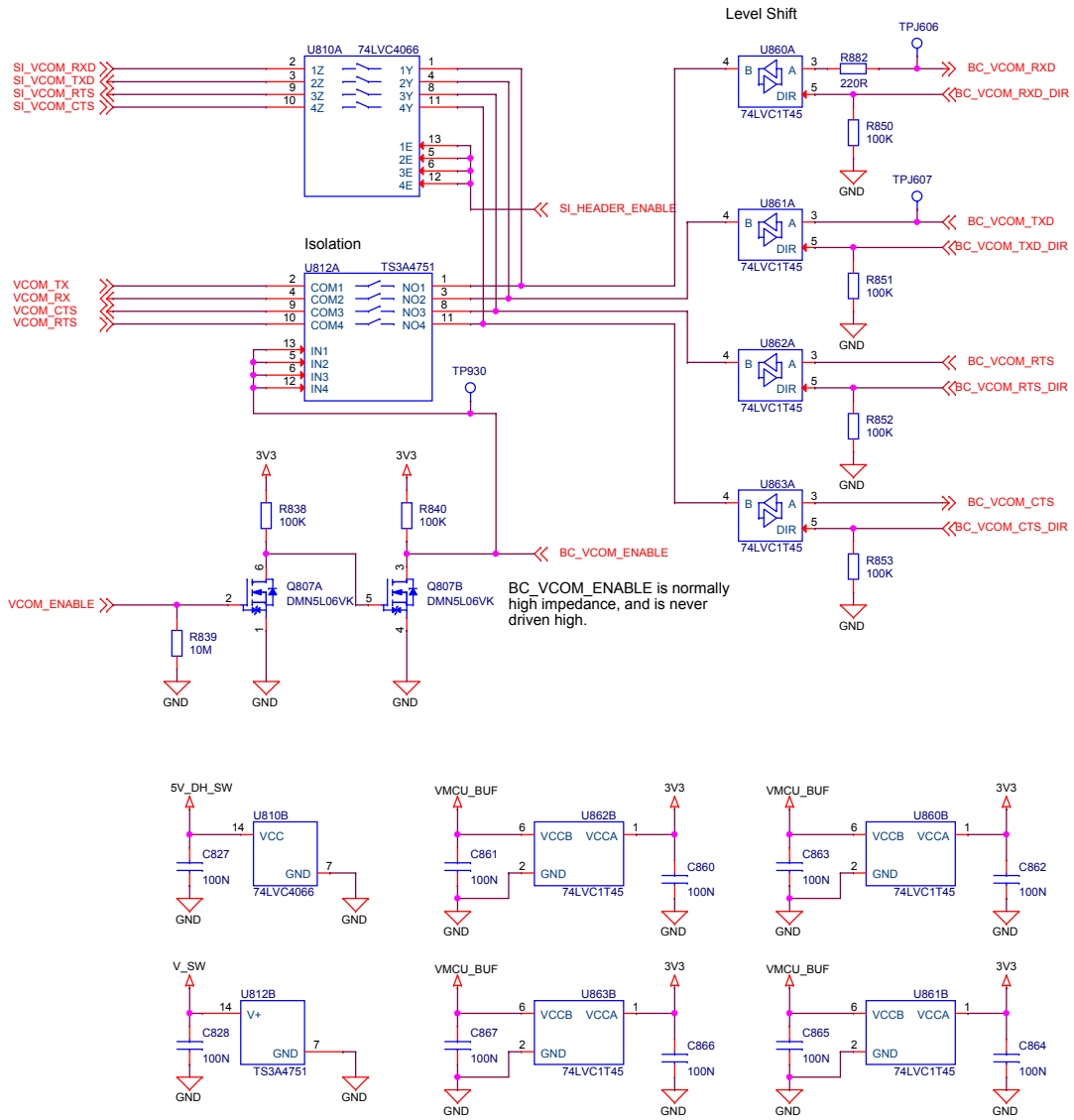

Board Name	**EFM32PG23 Pro Kit**
Page Title	**Simplicity & VCOM**
Designed: MAH	Approved: RGU
Size: A3	Sheet Modified Date: Tuesday, March 09, 2021
Board Number	**BRD2504A**
Revision	**A00**
Sheet	10 of 13

COPYRIGHT SILICON LABORATORIES INC. 2021 CONFIDENTIAL – SUBJECT TO TERMS OF USE

J-Link USB Port

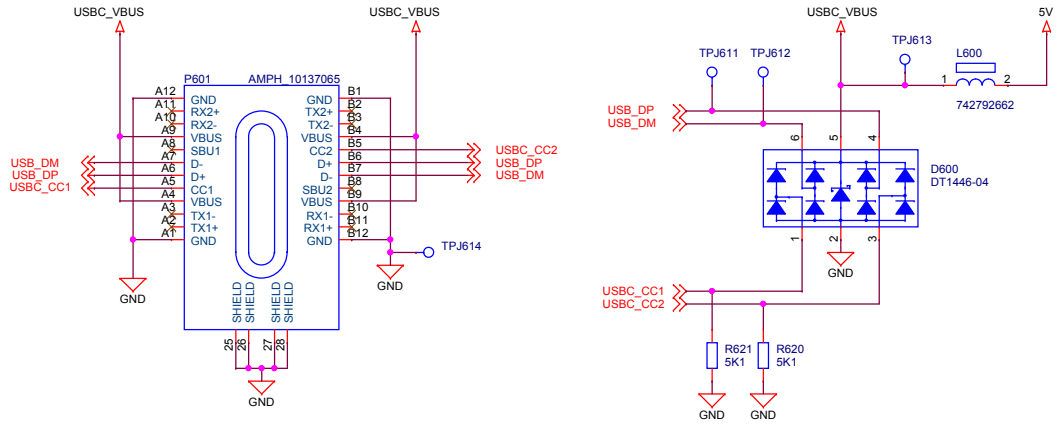

3V3 Regulator

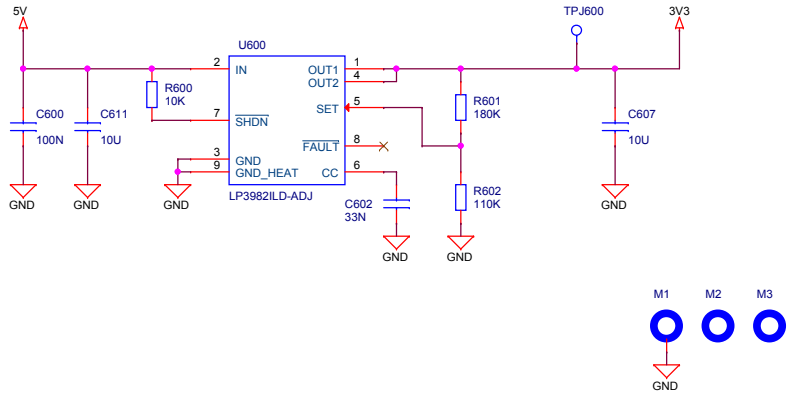

VTarget Voltage Mirror

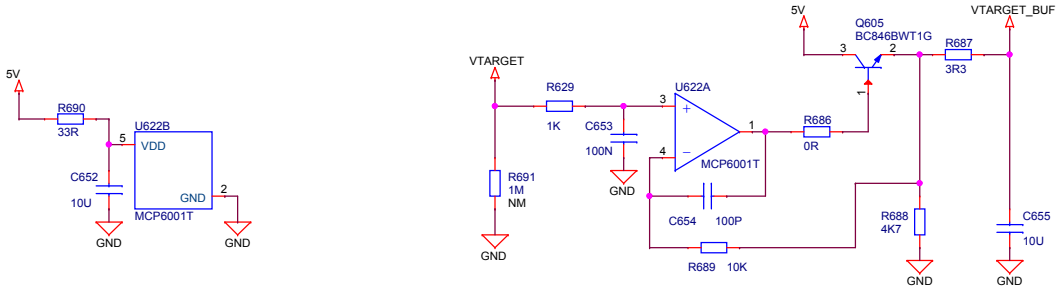

Power Supply for Analog Switches

Analog switches used for isolation are powered by 3V6_SW when the USB cable is connected, otherwise by VMCU.

J-Link USB Cable	PMOS State	NMOS State	V_SW	VMCU_SENSE
Connected	Off	On	3.6V	VMCU
Disconnected	On	Off	VMCU	Isolated

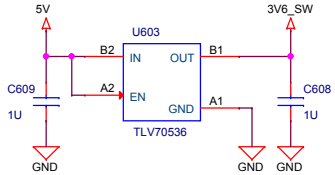

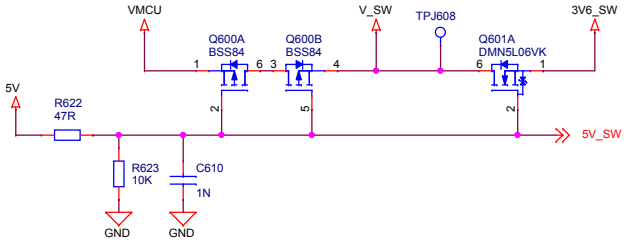

VMCU Voltage Mirror

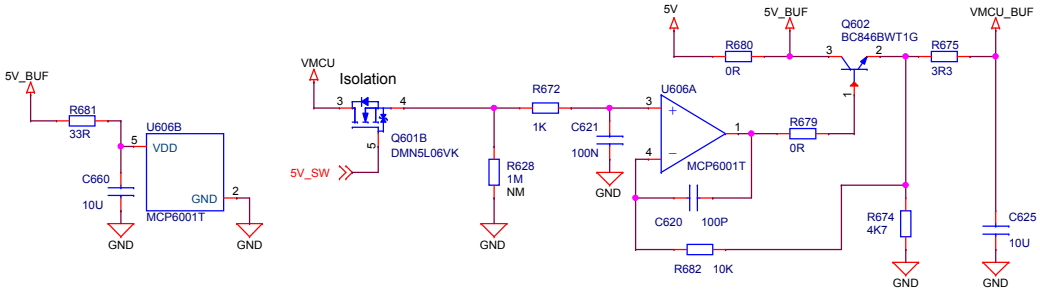

SILICON LABS

Board Name	EFM32PG23 Pro Kit
Page Title	Power
Designed	MAH
Approved	RGU
Size	A3
Sheet Modified Date	Tuesday, March 09, 2021
Board Number	BRD2504A
Revision	A00
Sheet	11 of 13

COPYRIGHT SILICON LABORATORIES INC. 2021 CONFIDENTIAL – SUBJECT TO TERMS OF USE

Board Controller

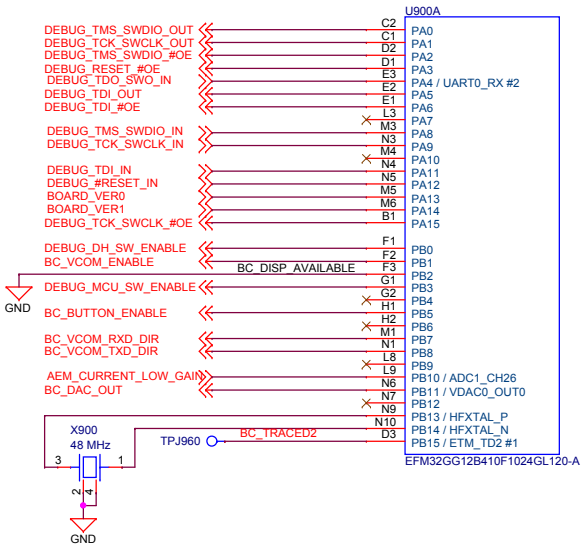

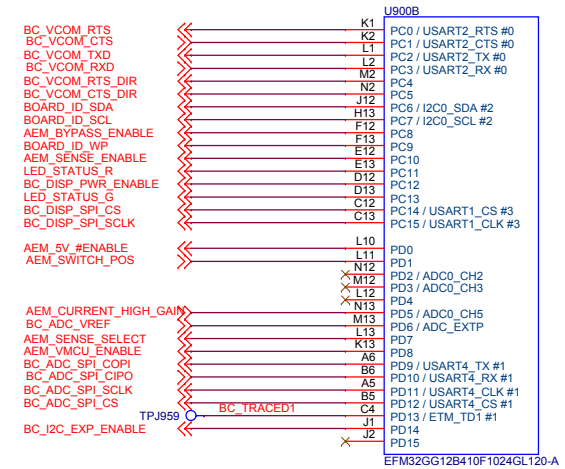

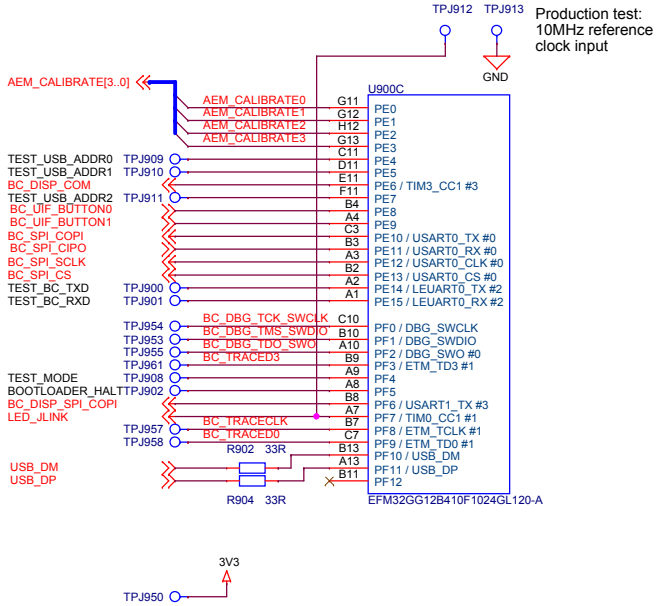

Power & Decoupling

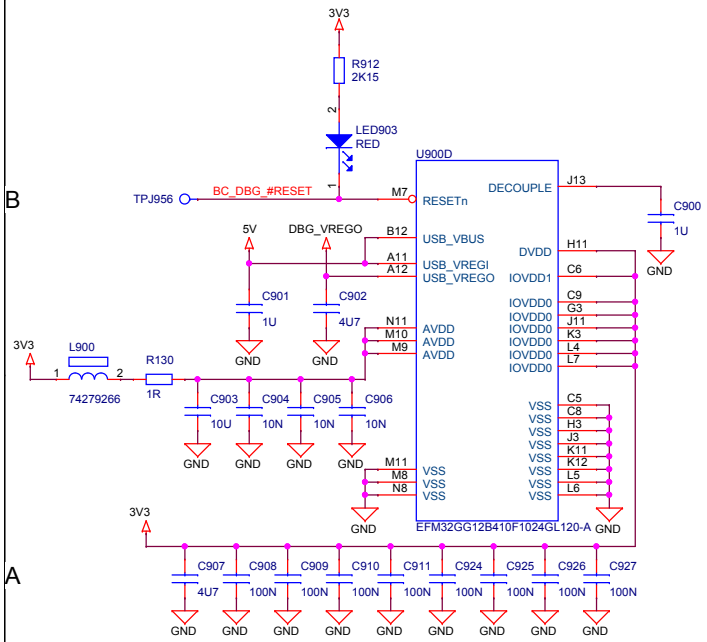

Board ID & Button Isolation

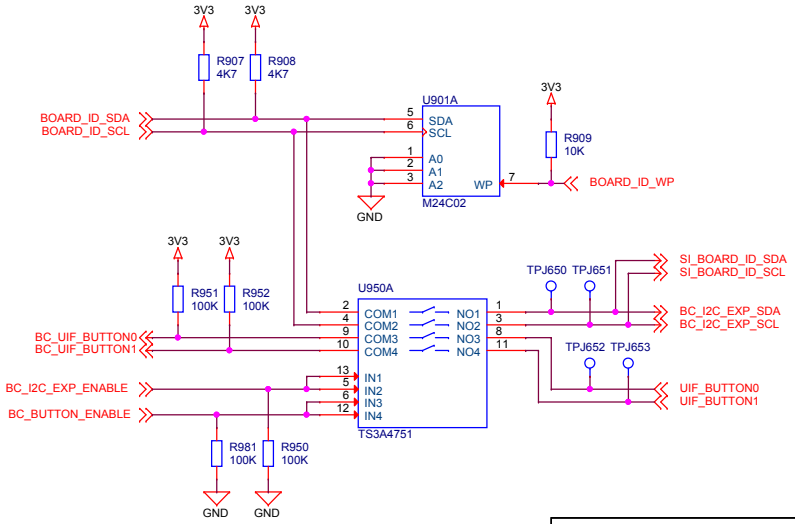

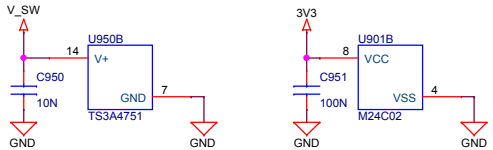

BC Serial Flash

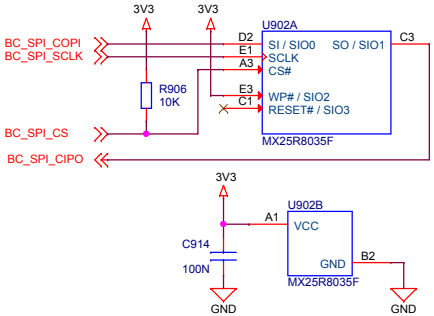

Board Version

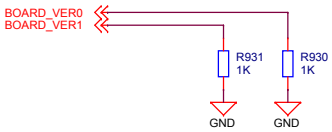

SILICON LABS	Board Name: **EFM32PG23 Pro Kit**	
Designed: MAH / Approved: RGU	Page Title: **Board Controller**	
Size: A3 / Sheet Modified Date: Tuesday, March 09, 2021	Board Number: **BRD2504A**	Revision: **A00**
		Sheet: 12 of 13

COPYRIGHT SILICON LABORATORIES INC. 2021 CONFIDENTIAL – SUBJECT TO TERMS OF USE

Indicator LEDs

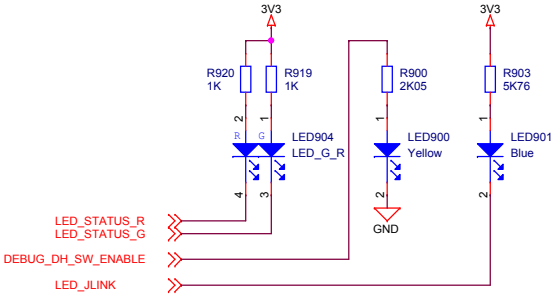

BC ADC Reference

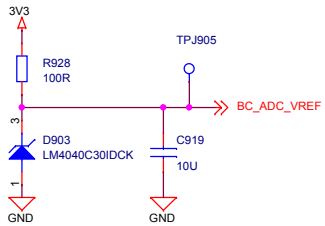

BC Voltage Sense

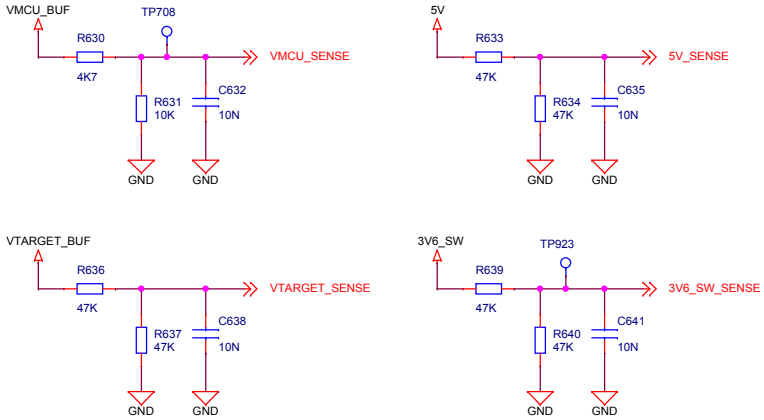

BC Voltage Sense ADC

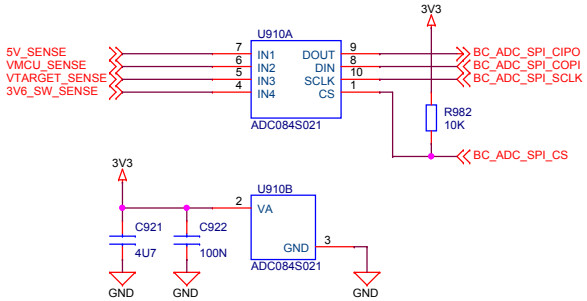

SILICON LABS	Board Name: **EFM32PG23 Pro Kit**	
	Page Title: **Board Controller Misc**	
Designed: MAH / Approved: RGU	Board Number: **BRD2504A**	Revision: **A00**
Size: A3 / Sheet Modified Date: Tuesday, March 09, 2021		Sheet: 13 of 13

COPYRIGHT SILICON LABORATORIES INC. 2021 CONFIDENTIAL – SUBJECT TO TERMS OF USE