EFR32 Blue Gecko Radio Board

2.4 GHz 10.5 dBm, DCDC to PAVDD

Board Function	Page
Title Page	1
RF, Antenna & Power	2
EFR32 Signal Assignments	3
WSTK Connectors & Board ID	4

Revision History

Rev.	Description
A00	Initial release.
B00	Added SPI flash.
B01	Replaced R1 with L2 to fine tune antenna matching.

SCHEMATIC1

<Path Name> SILICON LABS	Schematic Title: EFR32BG 2.4 GHz 10.5 dBm Radio Board	
	Page Title: Title Page	
Designed: JSH / Approved: JNO	Document number: BRD4100A	Revision: B01
Size: A3 / BOM Doc No: <Cage Code>		
Design Created Date: Monday, April 02, 2012	Sheet Created Date: Monday, April 02, 2012 / Sheet Modified Date: Tuesday, September 15, 2015	Sheet 1 of 4

Antenna & Radio Interface

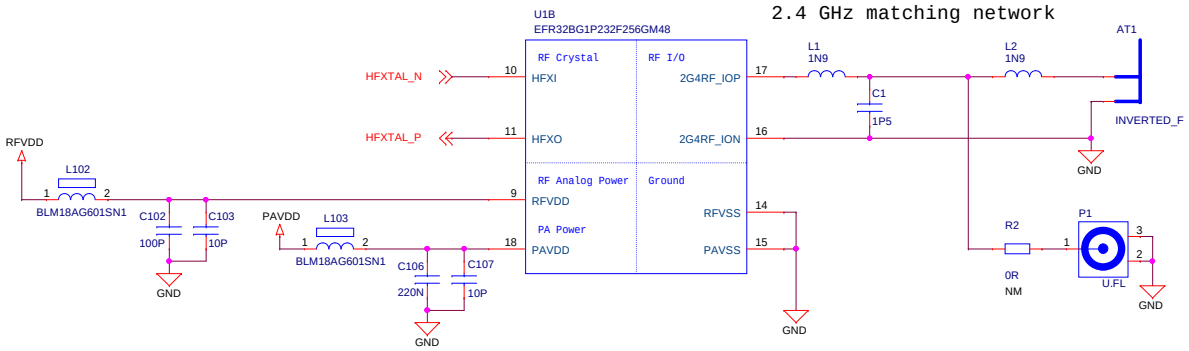

High Frequency Crystal

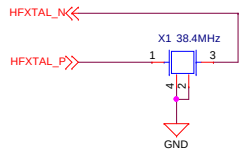

Low Frequency Crystal

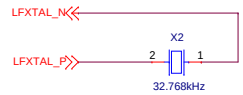

RF Shielding

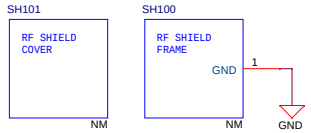

Power & Decoupling

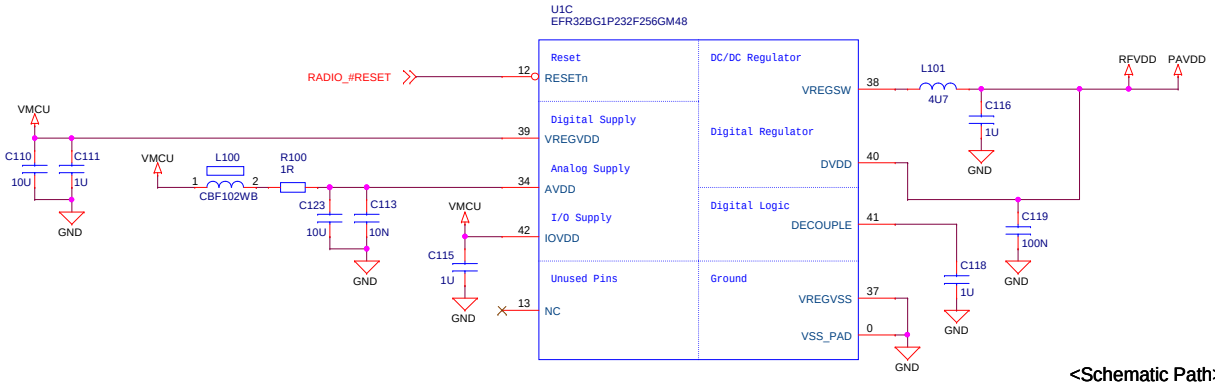

<Schematic Path>
SCHEMATIC1

SILICON LABS	Schematic Title: **EFR32BG 2.4 GHz 10.5 dBm Radio Board**	
	Page Title: **RF, Antenna and Power**	
Designed: JSH	Approved: JNO	
Size: A3	BOM Doc No: <Cage Code>	Document number: **BRD4100A**	Revision: B01
Design Created Date: Monday, April 02, 2012	Sheet Created Date: Monday, April 02, 2012	Sheet Modified Date: Tuesday, September 15, 2015	Sheet 2 of 4

EFR32 Pin Mapping

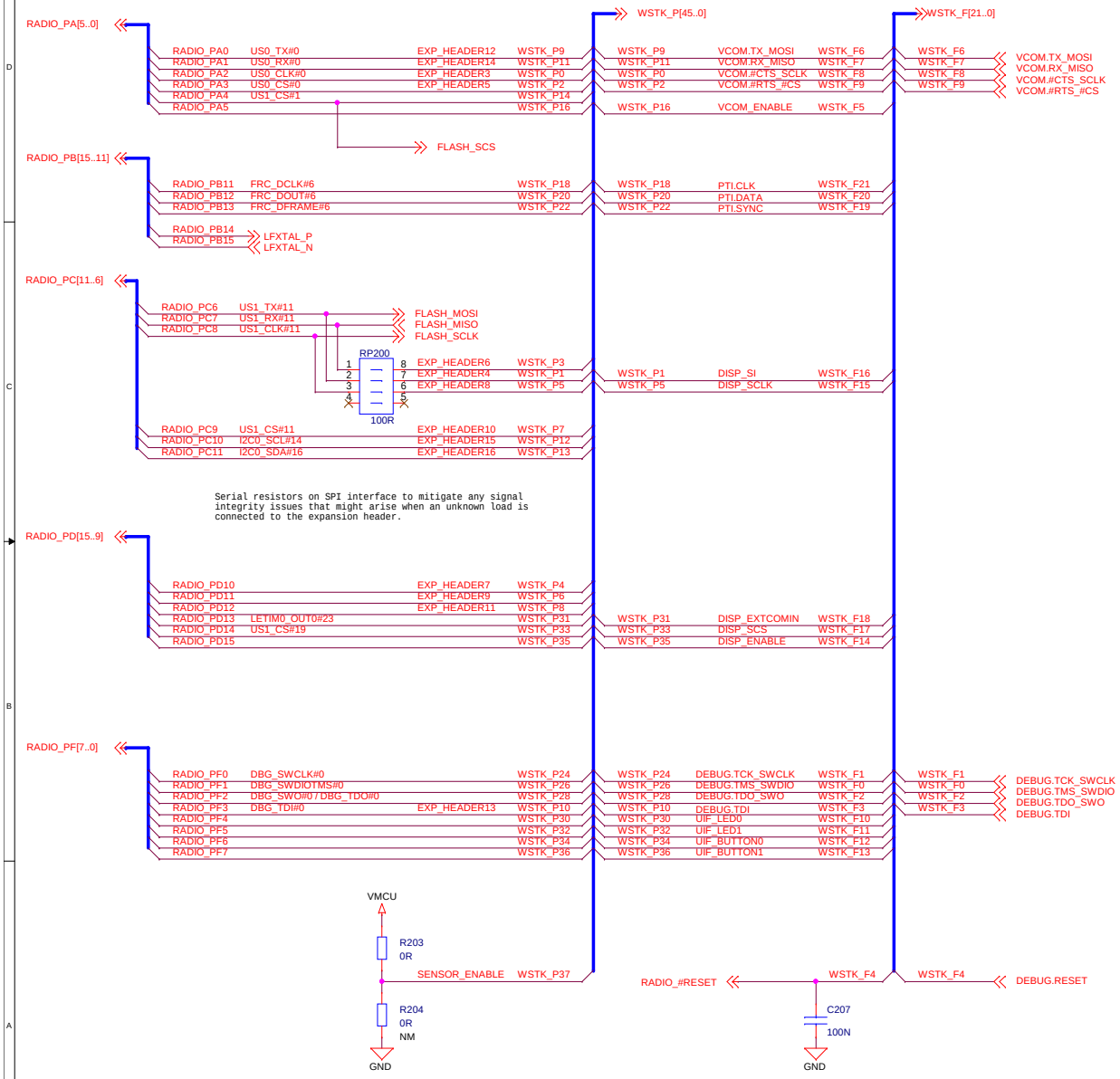

EFR32 I/O Port Pins

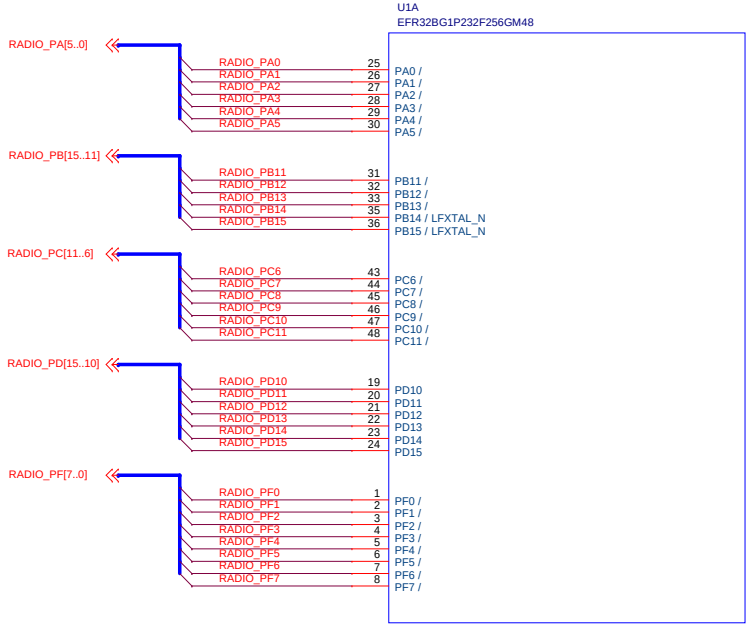

Serial Flash

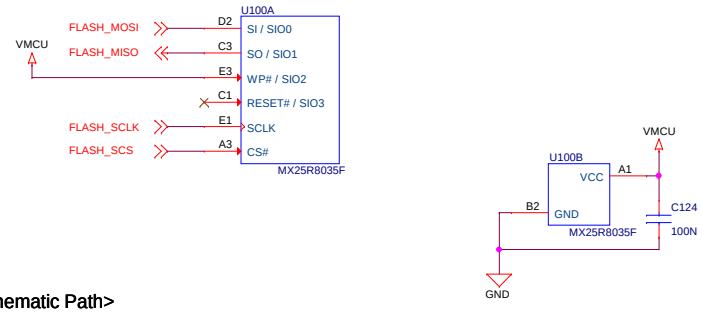

<Schematic Path>
SCHEMATIC1

SILICON LABS	Schematic Title: **EFR32BG 2.4 GHz 10.5 dBm Radio Board**
	Page Title: **EFR32 I/O Port Connections**
Designed: JSH / Approved: JNO	Document number: **BRD4100A** / Revision: B01
Size: A3 / BOM Doc No: <Cage Code>	
Design Created Date: Monday, April 02, 2012	Sheet Created Date: Wednesday, April 11, 2012 / Sheet Modified Date: Tuesday, September 15, 2015 / Sheet 3 of 4

WSTK Connectors

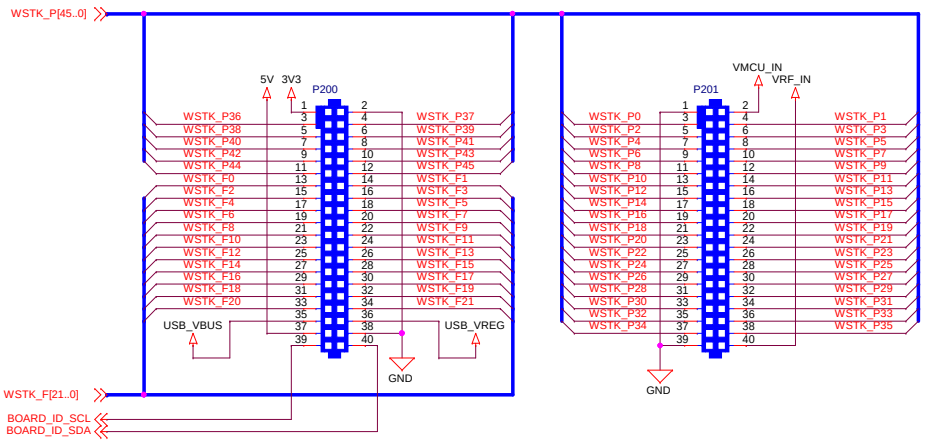

WSTK Power Decoupling

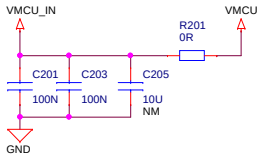

Board Identification

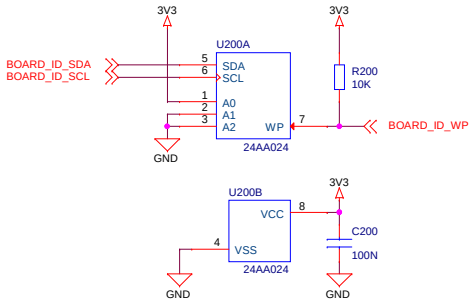

Test Points

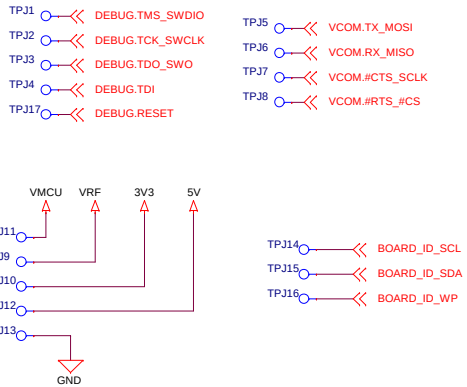

<Schematic Path>
SCHEMATIC1

Schematic Title	EFR32BG 2.4 GHz 10.5 dBm Radio Board
Page Title	WSTK Connectors & Board ID
Designed: JSH	Approved: JNO
Size A3	BOM Doc No: <Cage Code>
Document number	BRD4100A
Revision	B01
Design Created Date: Monday, April 02, 2012	
Sheet Created Date	Tuesday, April 03, 2012
Sheet Modified Date	Tuesday, September 15, 2015
Sheet	4 of 4