EFR32 Blue Gecko Radio Board

2.4 GHz 10.5 dBm, DCDC to PAVDD

Board Function	Page
Title Page	1
RF, Antenna & Power	2
EFR32 Signal Assignments	3
WSTK Connectors & Board ID	4

Revision History

Rev.	Description
A00	Initial release.
B00	Added SPI flash.
B01	Added L2 instead of 0R to fine tune antenna matching.
B02	Updated EFR32 to revision C0.

LEGAL NOTICE:
SILICON LABORATORIES INC. ("SILICON LABS") AND/OR ITS LICENSORS DO NOT WARRANT THE ACCURACY OR COMPLETENESS OF THIS SCHEMATIC OR ANY INFORMATION CONTAINED WITHIN THIS SCHEMATIC. IT IS PROVIDED "AS-IS" FOR REFERENCE ONLY. SILICON LABS DOES NOT WARRANT THAT THIS DESIGN WILL MEET THE SPECIFICATIONS, BE SUITABLE FOR YOUR APPLICATION OR FIT FOR ANY PARTICULAR PURPOSE, OR WILL OPERATE IN YOUR IMPLEMENTATION. SILICON LABS AND ITS LICENSORS DO NOT WARRANT THAT THE DESIGN IMPLIED IN THIS SCHEMATIC IS PRODUCTION-WORTHY. YOU SHOULD COMPLETELY VALIDATE AND TEST YOUR DESIGN IMPLEMENTATION TO CONFIRM SYSTEM FUNCTIONALITY FOR YOUR APPLICATION.

PCB1

PCB4100A

SCHEMATIC1

<Path Name>	Schematic Title: EFR32BG 2.4 GHz 10.5 dBm Radio Board	
	Page Title: Title Page	
Designed: JSH / Approved: JNO	Document number: BRD4100A	Revision: B02
Size: A3 / BOM Doc No: <Cage Code>		
Design Created Date: Monday, April 02, 2012	Sheet Created Date: Monday, April 02, 2012 / Sheet Modified Date: Wednesday, August 17, 2016	Sheet 1 of 4

COPYRIGHT SILICON LABORATORIES INC. 2020 CONFIDENTIAL - SUBJECT TO TERMS OF USE

Antenna & Radio Interface

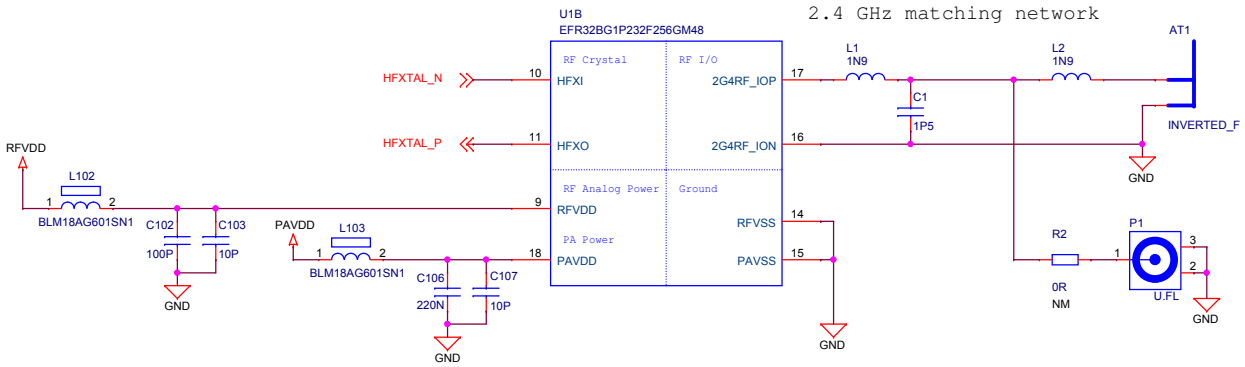

High Frequency Crystal

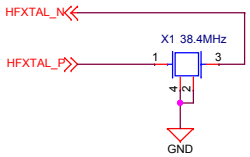

Low Frequency Crystal

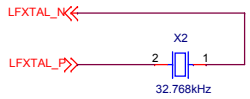

RF Shielding

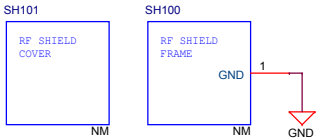

Power & Decoupling

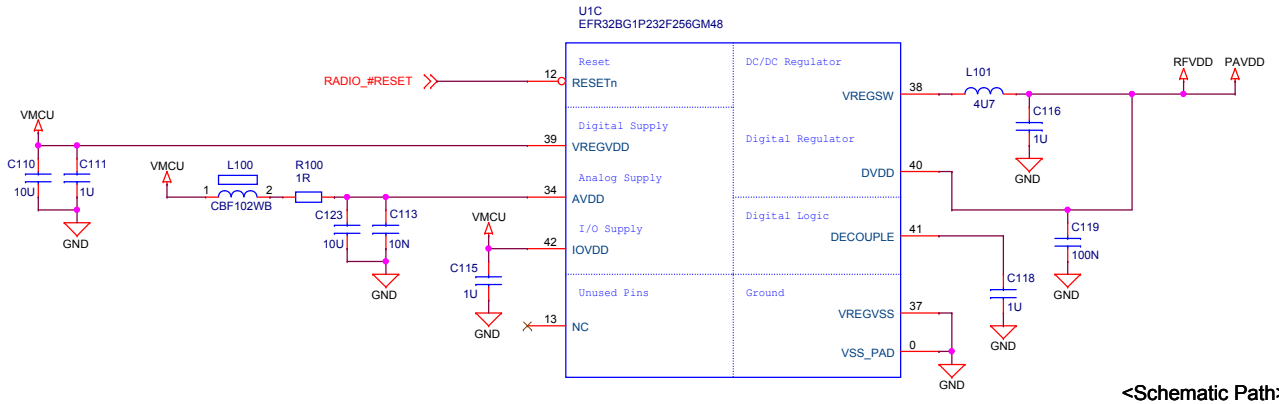

<Schematic Path>
SCHEMATIC1

SILICON LABS	Schematic Title: **EFR32BG 2.4 GHz 10.5 dBm Radio Board**
	Page Title: **RF, Antenna and Power**
Designed: JSH / Approved: JNO	Document number: **BRD4100A** / Revision: B02
Size: A3 / BOM Doc No: <Cage Code>	
Design Created Date: Monday, April 02, 2012	Sheet Created Date: Monday, April 02, 2012 / Sheet Modified Date: Wednesday, August 17, 2016 / Sheet 2 of 4

COPYRIGHT SILICON LABORATORIES INC. 2020 CONFIDENTIAL - SUBJECT TO TERMS OF USE

EFR32 Pin Mapping

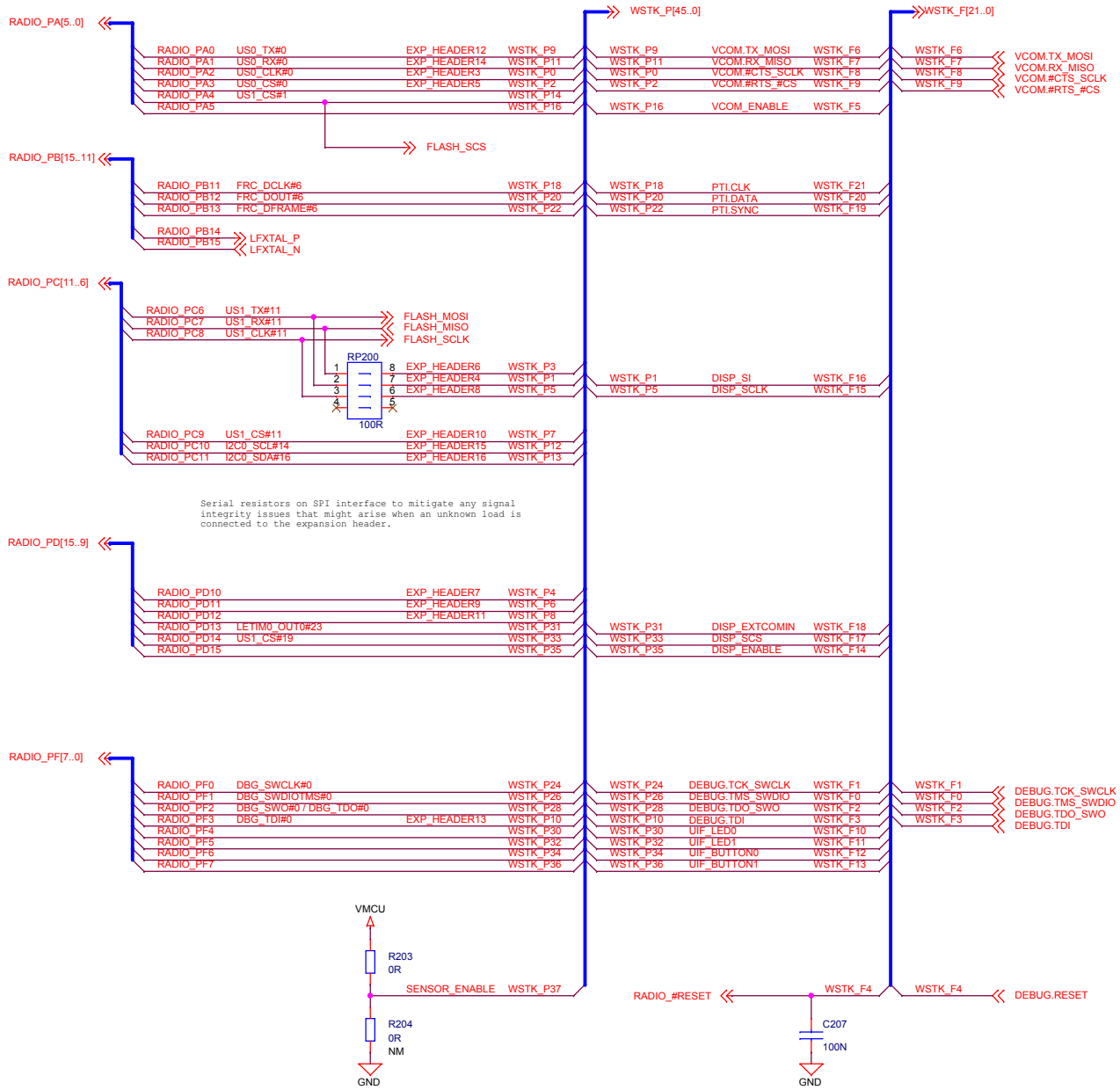

EFR32 I/O Port Pins

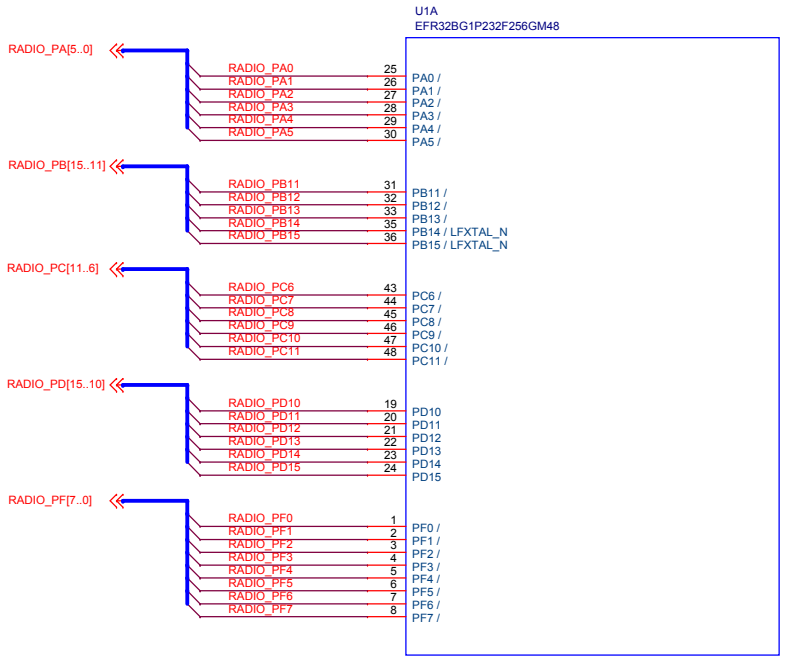

Serial Flash

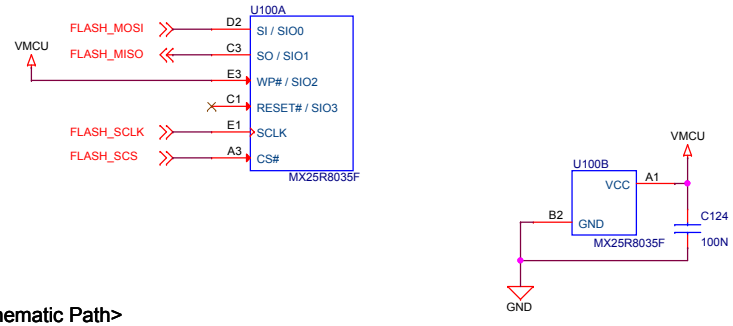

<Schematic Path>
SCHEMATIC1

SILICON LABS	Schematic Title: **EFR32BG 2.4 GHz 10.5 dBm Radio Board**
	Page Title: **EFR32 I/O Port Connections**
Designed: JSH / Approved: JNO	Document number: **BRD4100A** / Revision: B02
Size: A3 / BOM Doc No: <Cage Code>	
Design Created Date: Monday, April 02, 2012	Sheet Created Date: Wednesday, April 11, 2012 / Sheet Modified Date: Wednesday, August 17, 2016 / Sheet 3 of 4

COPYRIGHT SILICON LABORATORIES INC. 2020 CONFIDENTIAL - SUBJECT TO TERMS OF USE

WSTK Connectors

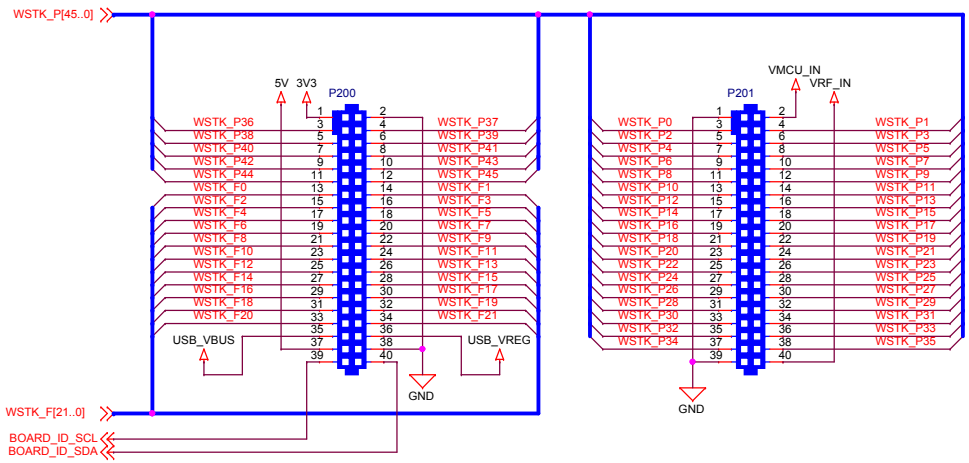

WSTK Power Decoupling

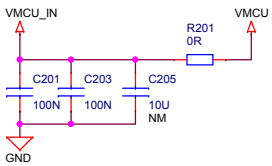

Board Identification

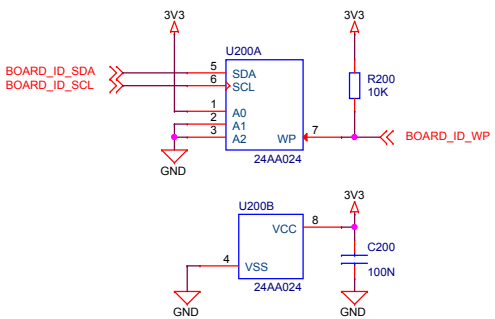

Test Points

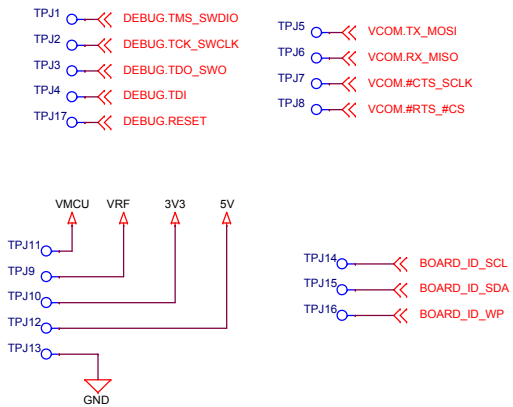

<Schematic Path>
SCHEMATIC1

SILICON LABS	Schematic Title: **EFR32BG 2.4 GHz 10.5 dBm Radio Board**
	Page Title: **WSTK Connectors & Board ID**
Designed: JSH / Approved: JNO	Document number: **BRD4100A** / Revision: B02
Size: A3 / BOM Doc No: <Cage Code>	
Design Created Date: Monday, April 02, 2012	Sheet Created Date: Tuesday, April 03, 2012 / Sheet Modified Date: Wednesday, August 17, 2016 / Sheet 4 of 4

COPYRIGHT SILICON LABORATORIES INC. 2020 CONFIDENTIAL - SUBJECT TO TERMS OF USE