EFR32xG21 Radio Board

2.4 GHz 20 dBm, QFN32

Board Function	Page
Title Page	1
RF, Antenna & Power	2
EFR32 Signal Assignments	3
WSTK Connectors & Board ID	4

Revision History

Rev.	Description
A00	Initial production release.
A01	Removed R3, U1 Pin 13 connected directly to GND. Improved PCB layout.
A02	Updated P200, P201, X1, X2 OPNs.

LEGAL NOTICE:
SILICON LABORATORIES INC. ("SILICON LABS") AND/OR ITS LICENSORS DO NOT WARRANT THE ACCURACY OR COMPLETENESS OF THIS SCHEMATIC OR ANY INFORMATION CONTAINED WITHIN THIS SCHEMATIC. IT IS PROVIDED "AS-IS" FOR REFERENCE ONLY. SILICON LABS DOES NOT WARRANT THAT THIS DESIGN WILL MEET THE SPECIFICATIONS, BE SUITABLE FOR YOUR APPLICATION OR FIT FOR ANY PARTICULAR PURPOSE, OR WILL OPERATE IN YOUR IMPLEMENTATION. SILICON LABS AND ITS LICENSORS DO NOT WARRANT THAT THE DESIGN IMPLIED IN THIS SCHEMATIC IS PRODUCTION-WORTHY. YOU SHOULD COMPLETELY VALIDATE AND TEST YOUR DESIGN IMPLEMENTATION TO CONFIRM SYSTEM FUNCTIONALITY FOR YOUR APPLICATION.

PCB1

PCB4180A

Designed: JSH	Approved: JNO	Schematic Title: EFR32xG21 2.4 GHz 20 dBm Radio Board	
Size A3	BOM Doc No:	Page Title: Title Page	
Design Created Date: Friday, November 03, 2017		Document number: BRD4180A	Revision: A02
		Sheet Created Date: Friday, November 03, 2017	Sheet Modified Date: Thursday, July 02, 2020
			Sheet 1 of 4

COPYRIGHT SILICON LABORATORIES INC. 2020 CONFIDENTIAL - SUBJECT TO TERMS OF USE

Antenna & Radio Interface

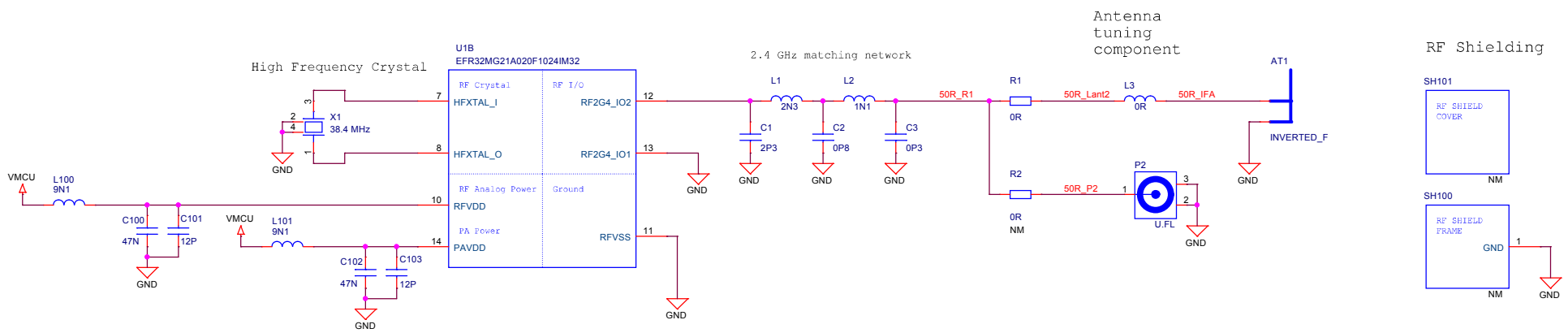

Power & Decoupling

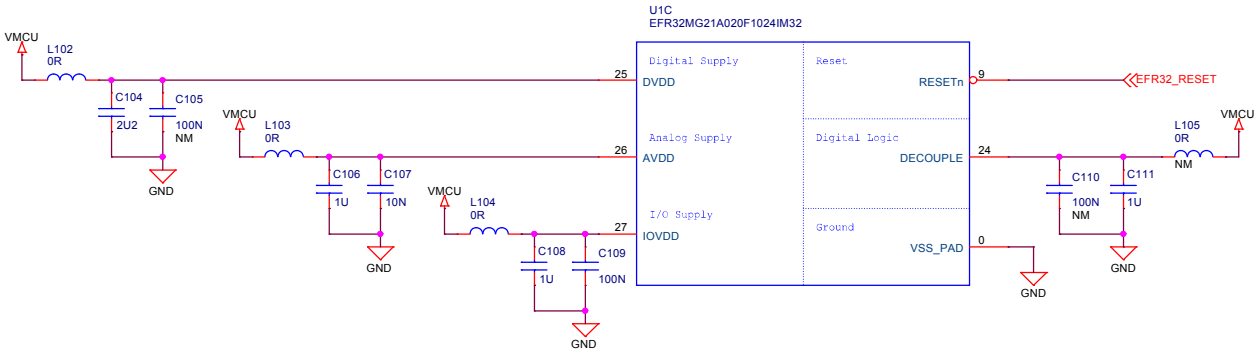

I/O Port Pins

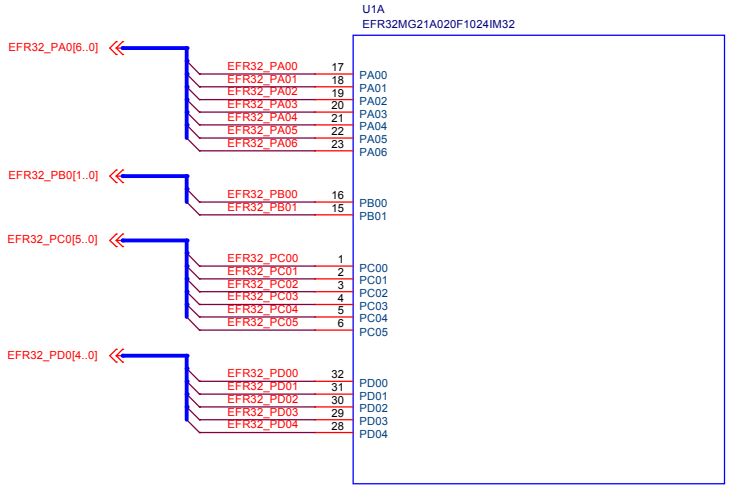

SILICON LABS	Schematic Title: **EFR32xG21 2.4 GHz 20 dBm Radio Board**		
	Page Title: **RF, Antenna and Power**		
Designed: JSH / Approved: JNO	Document number: **BRD4180A**		Revision: A02
Size: A3 / BOM Doc No:			
Design Created Date: Friday, November 03, 2017	Sheet Created Date: Friday, November 03, 2017	Sheet Modified Date: Thursday, July 02, 2020	Sheet 2 of 4

COPYRIGHT SILICON LABORATORIES INC. 2020 CONFIDENTIAL - SUBJECT TO TERMS OF USE

Pin Mapping

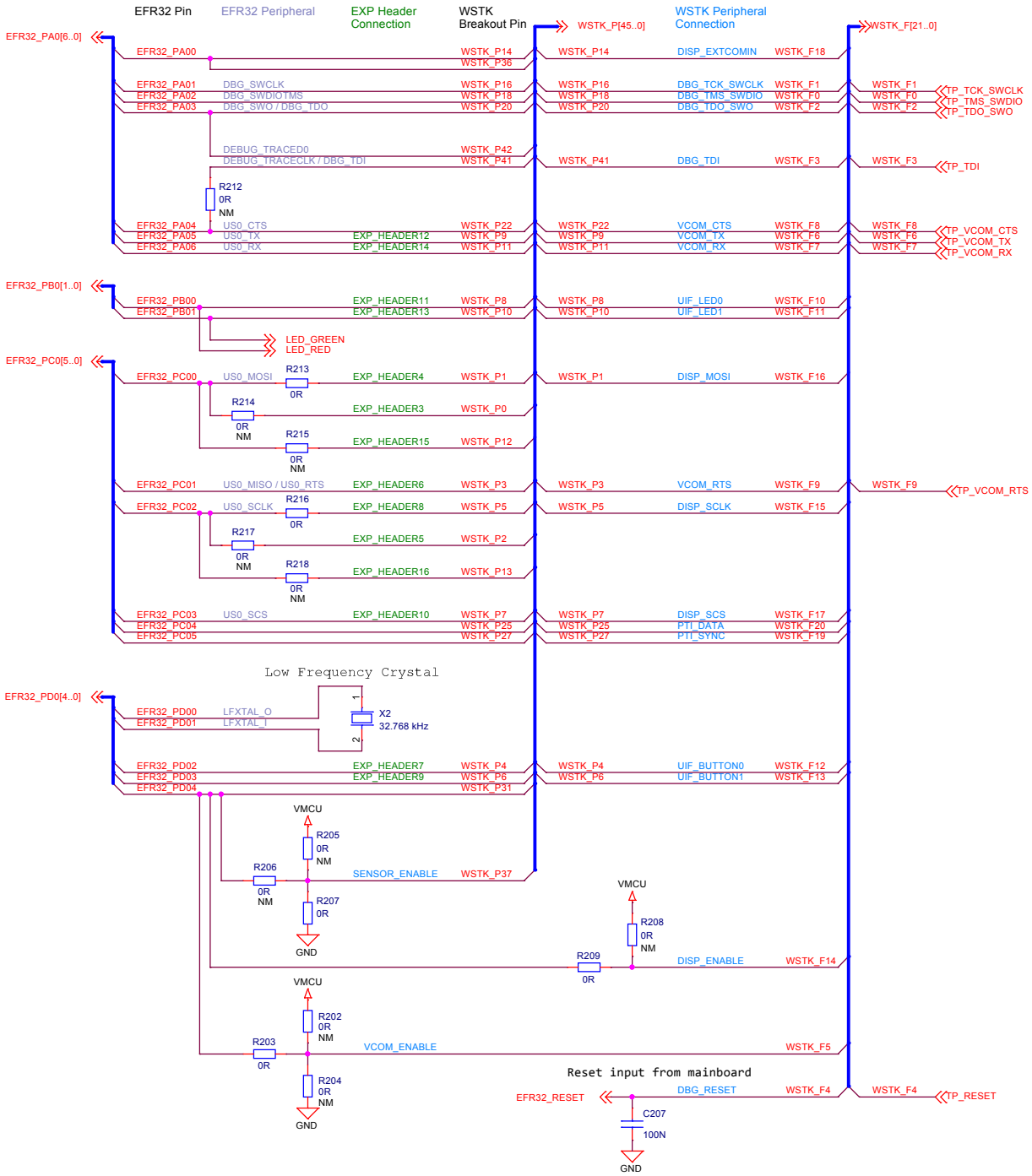

LEDs

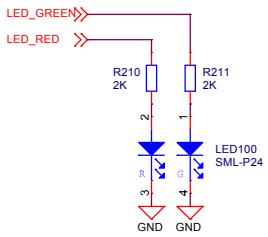

SILICON LABS

Schematic Title	EFR32xG21 2.4 GHz 20 dBm Radio Board
Page Title	I/O Port Connections
Designed: JSH	Approved: JNO
Size A3	BOM Doc No:
Document number	BRD4180A
Revision	A02
Design Created Date:	Friday, November 03, 2017
Sheet Created Date	Friday, November 03, 2017
Sheet Modified Date	Thursday, July 02, 2020
Sheet	3 of 4

COPYRIGHT SILICON LABORATORIES INC. 2020 CONFIDENTIAL - SUBJECT TO TERMS OF USE

WSTK Connectors

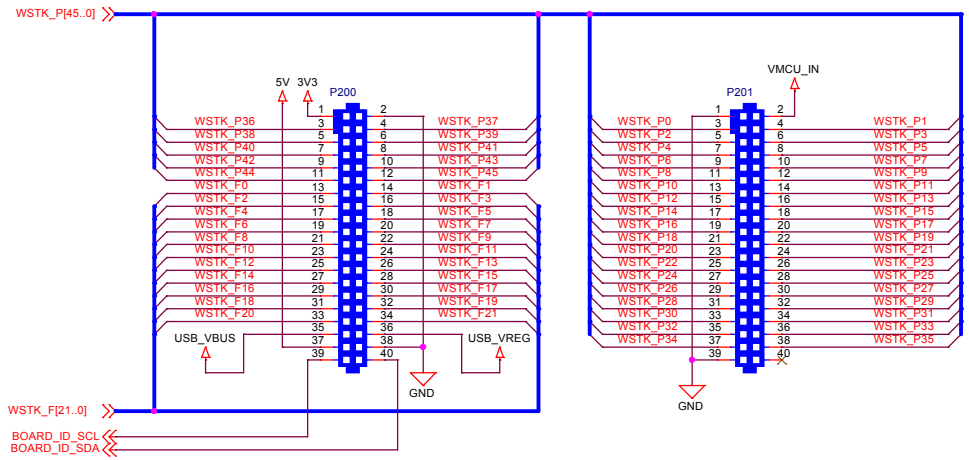

WSTK Power Decoupling

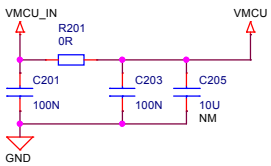

Board Identification

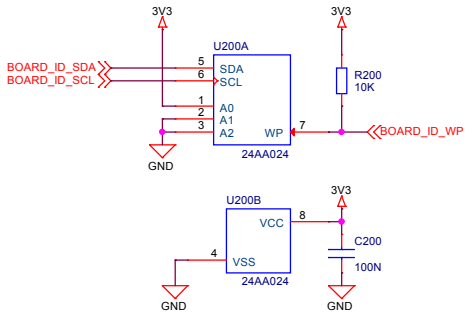

Test Points

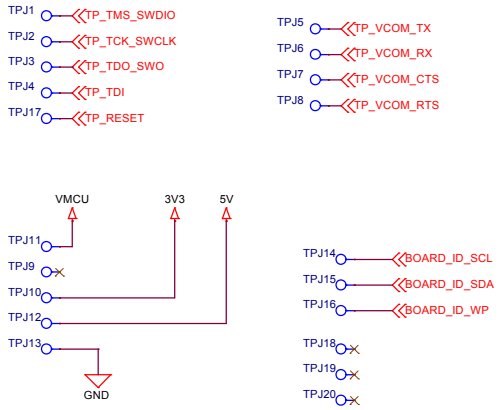

Battery Connector

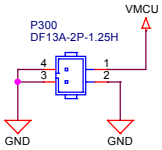

SILICON LABS	Schematic Title: **EFR32xG21 2.4 GHz 20 dBm Radio Board**	
	Page Title: **WSTK Connectors & Board ID**	
Designed: JSH / Approved: JNO	Document number: **BRD4180A**	Revision: A02
Size: A3 / BOM Doc No:		
Design Created Date: Friday, November 03, 2017	Sheet Created Date: Friday, November 03, 2017 / Sheet Modified Date: Thursday, July 02, 2020	Sheet 4 of 4

COPYRIGHT SILICON LABORATORIES INC. 2020 CONFIDENTIAL - SUBJECT TO TERMS OF USE