# BG24 Ranging Radio Board

**<Header B>**


| Board Function | Page |
|---|---|
| Title Page | 1 |
| RF, Antenna and Power | 2 |
| EFR32 Signal Assignments | 3 |
| WSTK Connectors & Board ID | 4 |


## Revision History

| Rev. | Description |
|---|---|
| A00 | Initial release revision. |
| A01 | Changed HFXO crystal to TXC |
| A02 | Updated PCB silkscreen, P200, P201 OPN |

PCB1

PCB4198A


LEGAL NOTICE:
SILICON LABORATORIES INC. ("SILICON LABS") AND/OR ITS LICENSORS DO NOT WARRANT THE ACCURACY OR COMPLETENESS OF THIS SCHEMATIC OR ANY INFORMATION CONTAINED WITHIN THIS SCHEMATIC. IT IS PROVIDED "AS-IS" FOR REFERENCE ONLY. SILICON LABS DOES NOT WARRANT THAT THIS DESIGN WILL MEET THE SPECIFICATIONS, BE SUITABLE FOR YOUR APPLICATION OR FIT FOR ANY PARTICULAR PURPOSE, OR WILL OPERATE IN YOUR IMPLEMENTATION. SILICON LABS AND ITS LICENSORS DO NOT WARRANT THAT THE DESIGN IMPLIED IN THIS SCHEMATIC IS PRODUCTION-WORTHY. YOU SHOULD COMPLETELY VALIDATE AND TEST YOUR DESIGN IMPLEMENTATION TO CONFIRM SYSTEM FUNCTIONALITY FOR YOUR APPLICATION.


| | |
|---|---|
| Designed: TAB | Approved: RGU |
| Size: A3 | Sheet Modified Date: Wednesday, July 31, 2024 |
| Board Name | BG24 Ranging Radio Board |
| Page Title | Title Page |
| Board Number | BRD4198A |
| Revision | A02 |
| Sheet | 1 of 4 |


COPYRIGHT SILICON LABORATORIES INC. 2020 CONFIDENTIAL – SUBJECT TO TERMS OF USE

## Antenna & Radio Interface

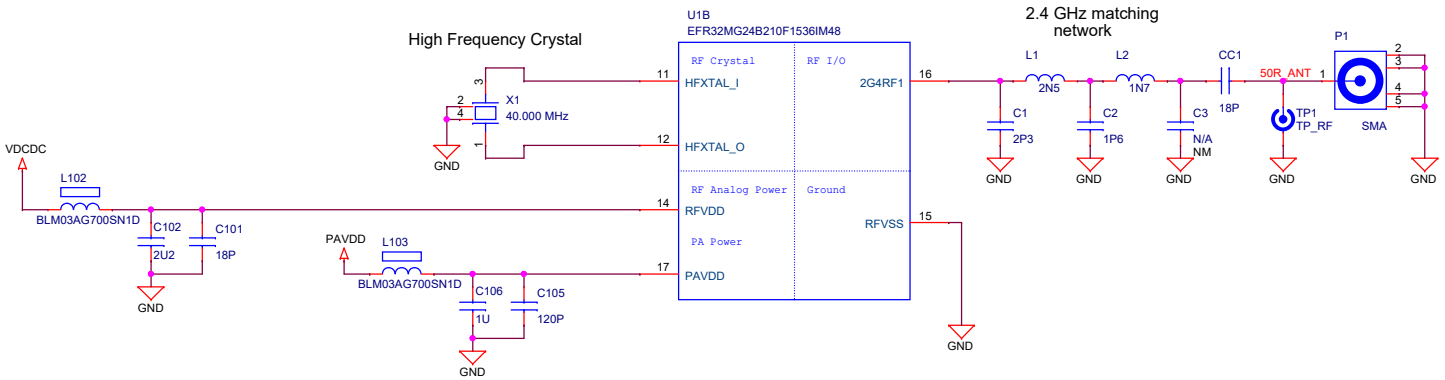


## PAVDD Configuration

| | Power Config 1 VMCU to PAVDD | Power Config 2 DCDC to PAVDD |
|---|---|---|
| R210 | Mount | Not mount |
| R211 | Not mount | Mount |

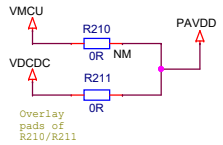


## RF Shielding

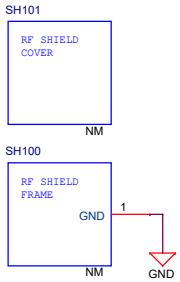


## Power & Decoupling

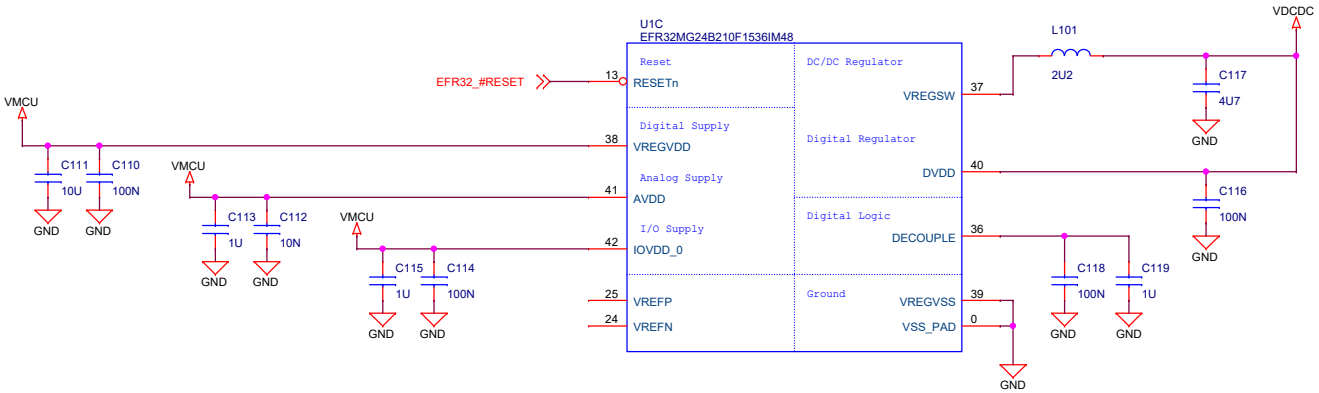


| | |
|---|---|
| Board Name | BG24 Ranging Radio Board |
| Page Title | RF & Power |
| Designed | TAB |
| Approved | RGU |
| Size | A3 |
| Sheet Modified Date | Wednesday, July 31, 2024 |
| Board Number | BRD4198A |
| Revision | A02 |
| Sheet | 2 of 4 |

COPYRIGHT SILICON LABORATORIES INC. 2020 CONFIDENTIAL – SUBJECT TO TERMS OF USE

## Pin Mapping

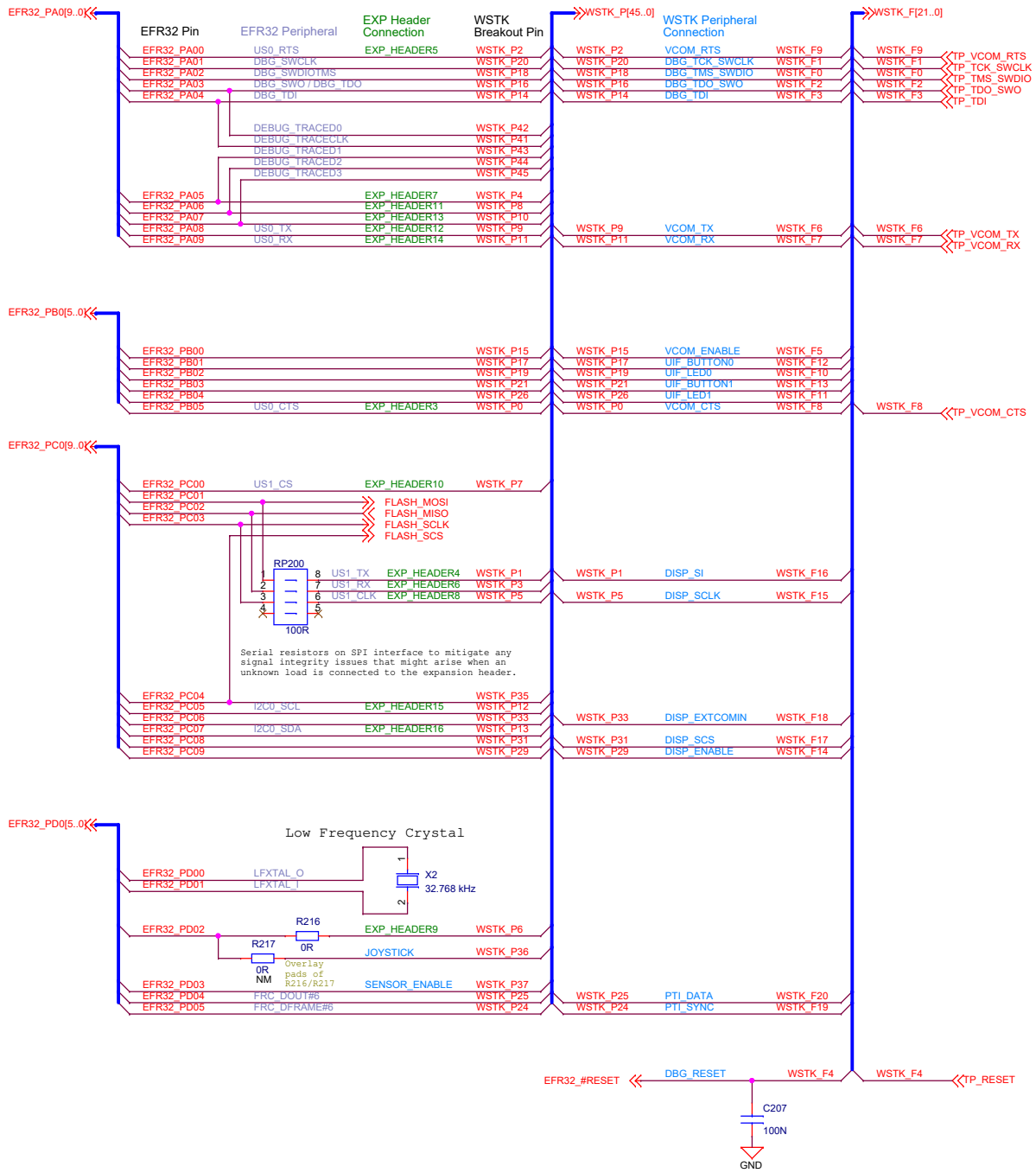


## I/O Port Pins

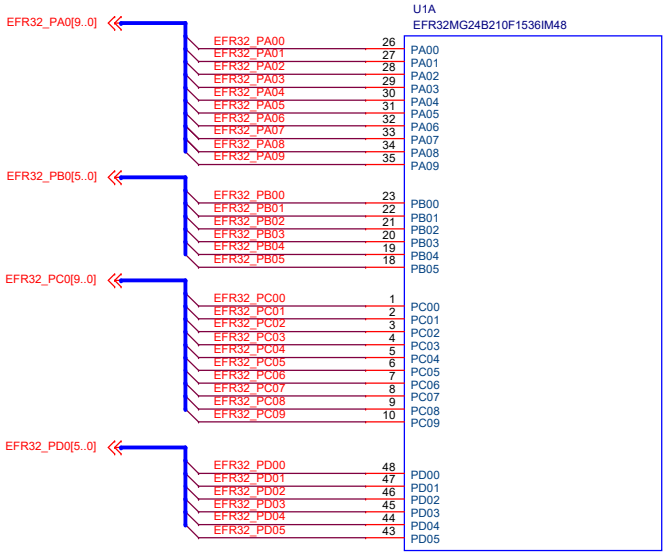


## Serial Flash

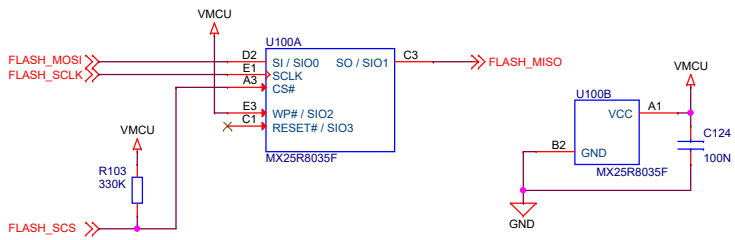


SILICON LABS

| | |
|---|---|
| Board Name | BG24 Ranging Radio Board |
| Page Title | EFR32 Signal Assignments |
| Designed | TAB |
| Approved | RGU |
| Size | A3 |
| Sheet Modified Date | Wednesday, July 31, 2024 |
| Board Number | BRD4198A |
| Revision | A02 |
| Sheet | 3 of 4 |

COPYRIGHT SILICON LABORATORIES INC. 2020 CONFIDENTIAL – SUBJECT TO TERMS OF USE

## WSTK Connectors

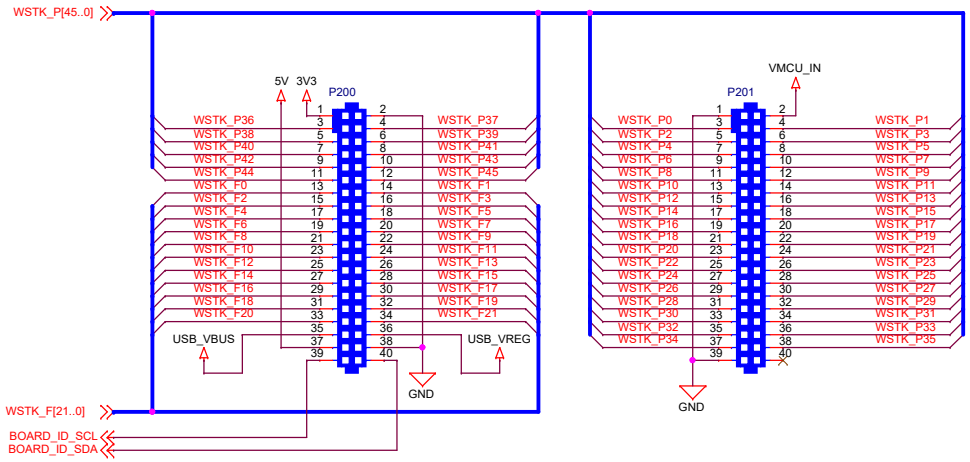


## WSTK Power Decoupling

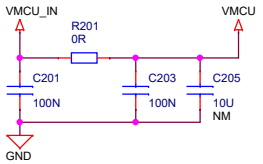


## Board Identification

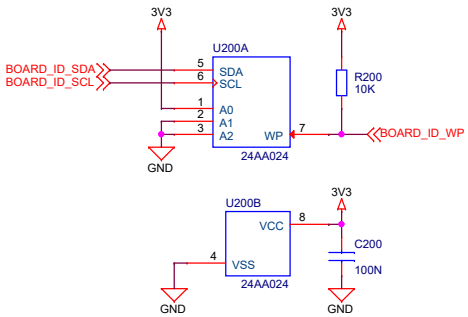


## Test Points

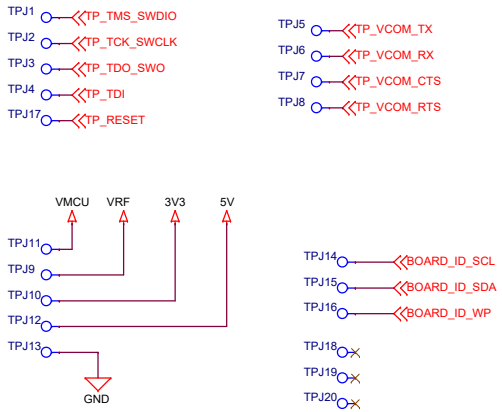


| | | |
|---|---|---|
| SILICON LABS | Board Name: **BG24 Ranging Radio Board** | |
| | Page Title: **WSTK Connectors & Board ID** | |
| Designed: TAB / Approved: RGU | Board Number: **BRD4198A** | Revision: **A02** |
| Size: A3 / Sheet Modified Date: Wednesday, July 31, 2024 | | Sheet: 4 of 4 |

COPYRIGHT SILICON LABORATORIES INC. 2020 CONFIDENTIAL – SUBJECT TO TERMS OF USE