EFR32FG25 Radio Board

470 MHz +16 dBm

Board Function	Page
Title Page	1
RF & Power	2
Board Power	3
EFR32 Signal Assignments	4
WSTK Connectors & Board ID	5

Revision History

Rev.	Description
A00	Initial release.
A01	Upd. match. nw., X1, C112, C256, R225, U200. Fix P900 footpr. Thermistor, VBUS_Sense.
A02	Updated U1 OPN.
A03	Updated markings to 470MHz 16dBm. Fixed P900 footprint.

PCB1

PCB4272A

LEGAL NOTICE:
SILICON LABORATORIES INC. ("SILICON LABS") AND/OR ITS LICENSORS DO NOT WARRANT THE ACCURACY OR COMPLETENESS OF THIS SCHEMATIC OR ANY INFORMATION CONTAINED WITHIN THIS SCHEMATIC. IT IS PROVIDED "AS-IS" FOR REFERENCE ONLY. SILICON LABS DOES NOT WARRANT THAT THIS DESIGN WILL MEET THE SPECIFICATIONS, BE SUITABLE FOR YOUR APPLICATION OR FIT FOR ANY PARTICULAR PURPOSE, OR WILL OPERATE IN YOUR IMPLEMENTATION. SILICON LABS AND ITS LICENSORS DO NOT WARRANT THAT THE DESIGN IMPLIED IN THIS SCHEMATIC IS PRODUCTION-WORTHY. YOU SHOULD COMPLETELY VALIDATE AND TEST YOUR DESIGN IMPLEMENTATION TO CONFIRM SYSTEM FUNCTIONALITY FOR YOUR APPLICATION.

Designed: TAB	Approved: RGU
Size: A3	Sheet Modified Date: Thursday, August 18, 2022
Board Name	FG25 470 MHz 16 dBm Radio Board
Page Title	Title Page
Board Number	BRD4272A
Revision	A02
Sheet	1 of 5

COPYRIGHT SILICON LABORATORIES INC. 2020 CONFIDENTIAL – SUBJECT TO TERMS OF USE

Radio Interface

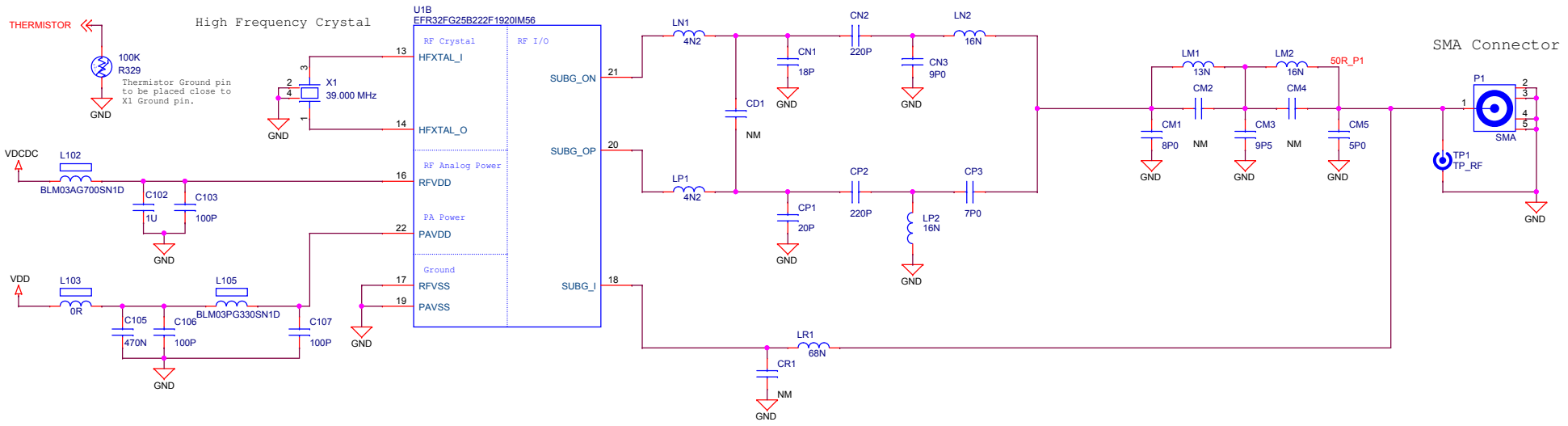

Power & Decoupling

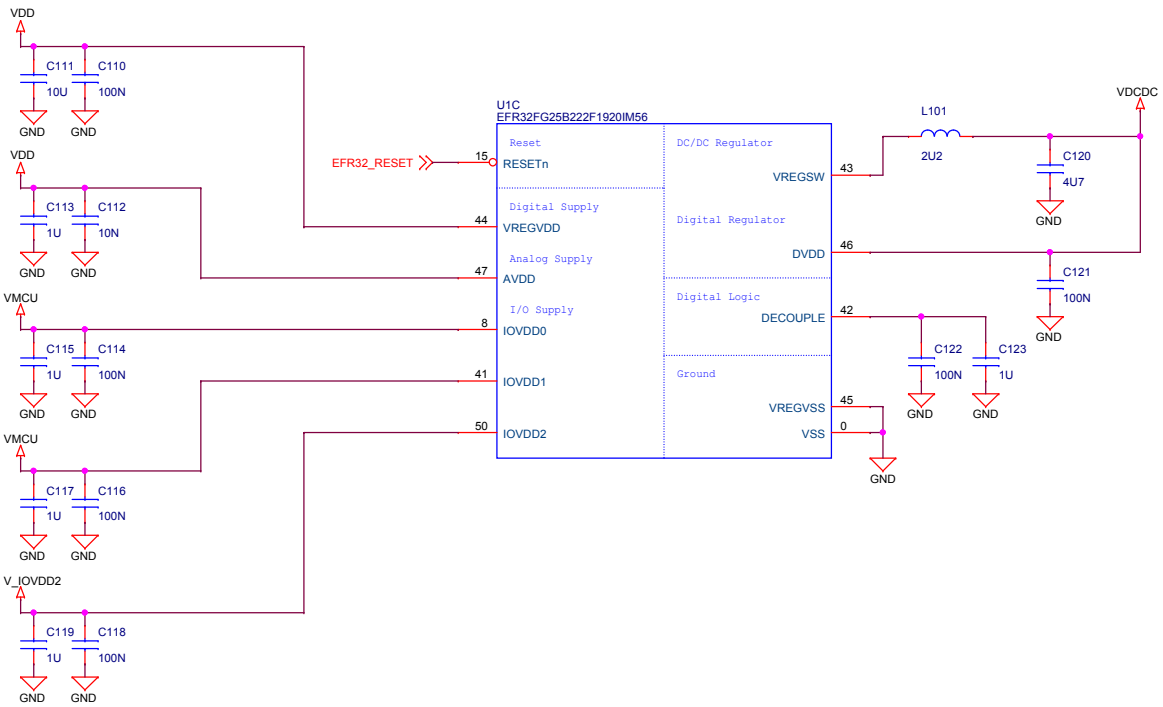

VDD Configuration

	Power Config 1 VMCU to VDD	Power Config 2 VLDO_3V6 to VDD
R210	Mount	Not mount
R211	Not mount	Mount

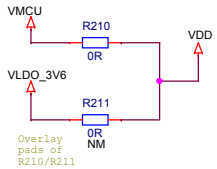

RF Shielding

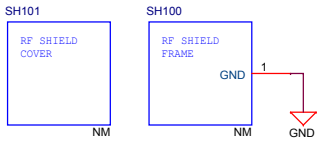

SILICON LABS

Designed	TAB
Approved	RGU
Size	A3
Sheet Modified Date	Thursday, August 18, 2022
Board Name	FG25 470 MHz 16 dBm Radio Board
Page Title	RF & Power
Board Number	BRD4272A
Revision	A02
Sheet	2 of 5

COPYRIGHT SILICON LABORATORIES INC. 2020 CONFIDENTIAL – SUBJECT TO TERMS OF USE

Debug USB Connection

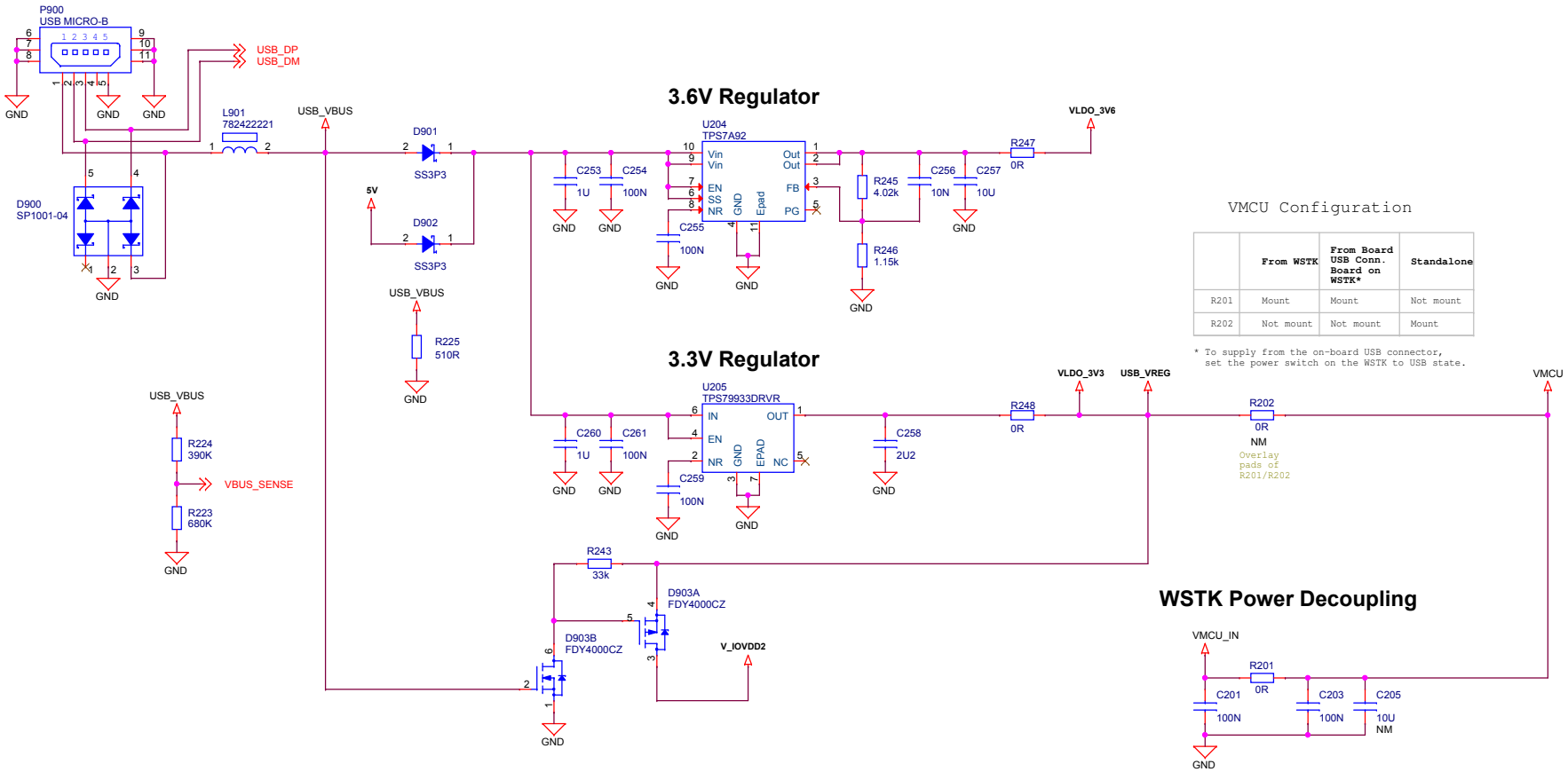

VMCU Configuration

	From WSTK	From Board USB Conn. Board on WSTK*	Standalone
R201	Mount	Mount	Not mount
R202	Not mount	Not mount	Mount

* To supply from the on-board USB connector, set the power switch on the WSTK to USB state.

SILICON LABS	Board Name: **FG25 470 MHz 16 dBm Radio Board**	
	Page Title: **Board Power**	
Designed: TAB / Approved: RGU	Board Number: **BRD4272A**	Revision: **A02**
Size: A3 / Sheet Modified Date: Thursday, August 18, 2022		Sheet: 3 of 5

COPYRIGHT SILICON LABORATORIES INC. 2020 CONFIDENTIAL – SUBJECT TO TERMS OF USE

Pin Mapping

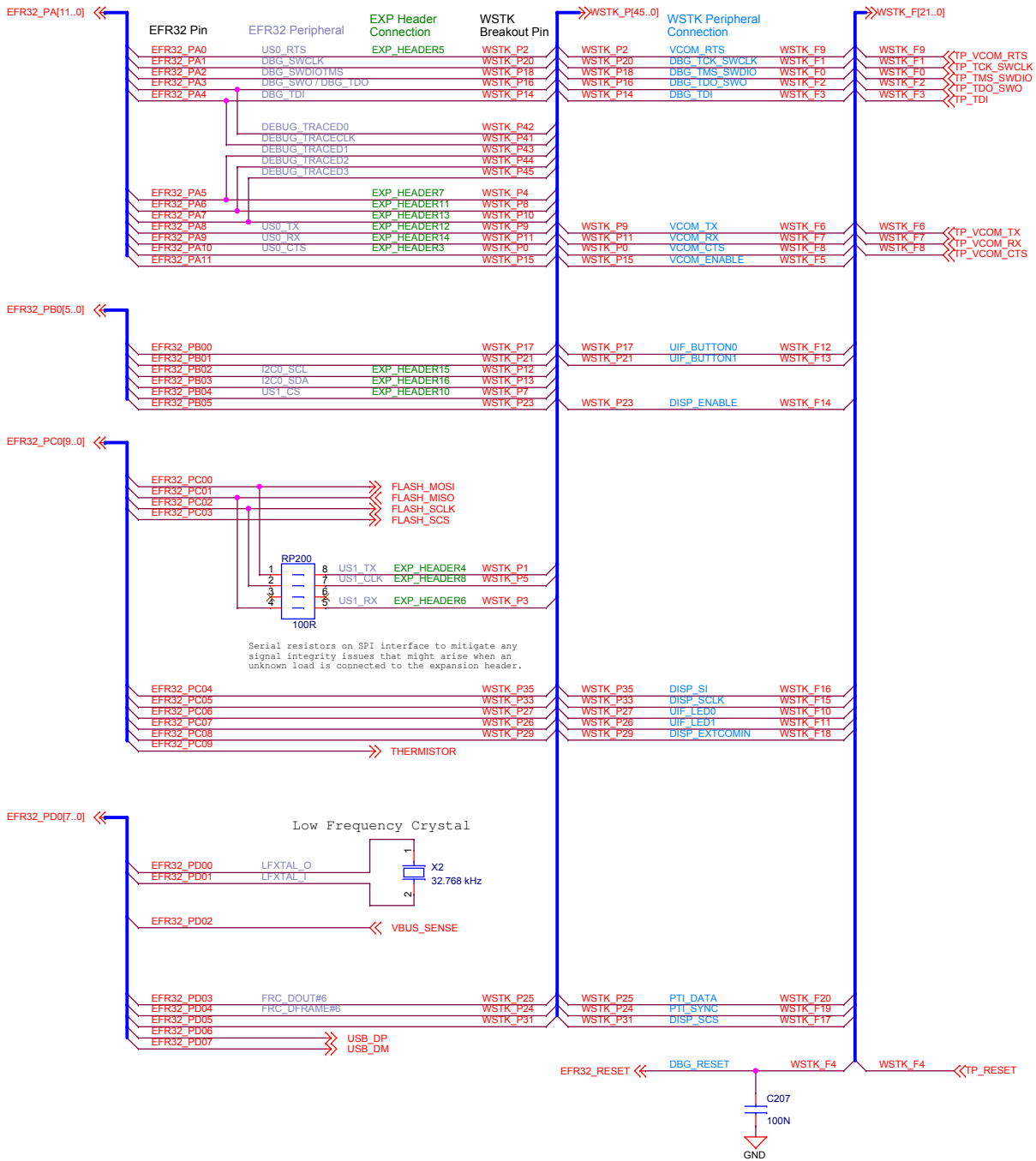

I/O Port Pins

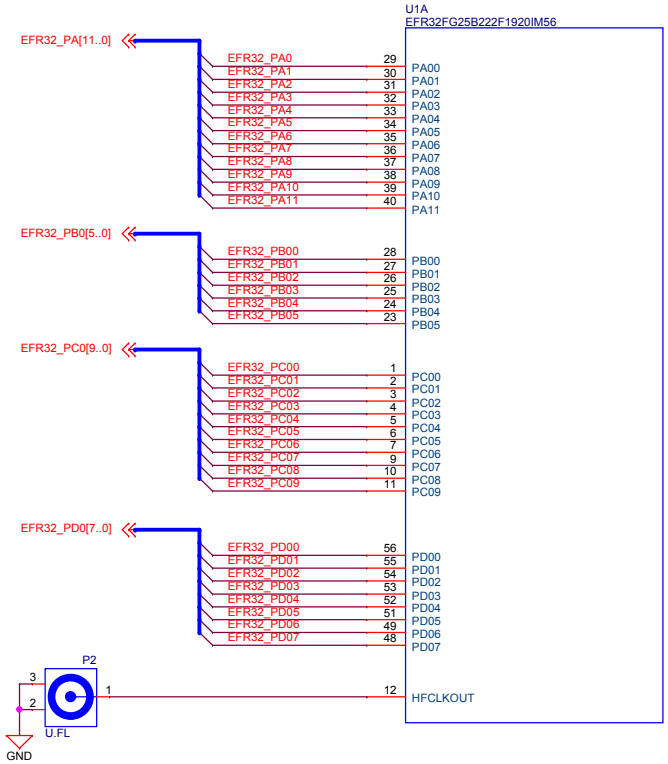

Serial Flash

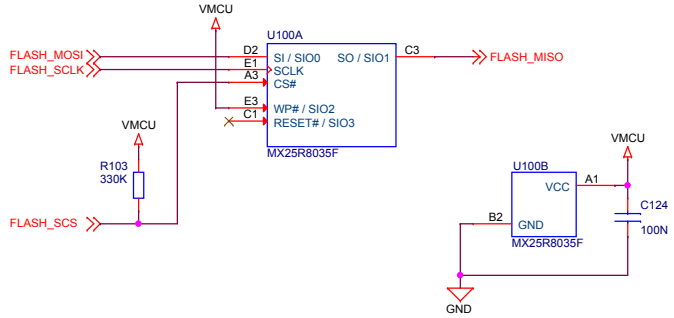

SILICON LABS

Designed	TAB
Approved	RGU
Size	A3
Sheet Modified Date	Thursday, August 18, 2022
Board Name	FG25 470 MHz 16 dBm Radio Board
Page Title	EFR32 Signal Assignments
Board Number	BRD4272A
Revision	A02
Sheet	4 of 5

COPYRIGHT SILICON LABORATORIES INC. 2020 CONFIDENTIAL – SUBJECT TO TERMS OF USE

WSTK Connectors

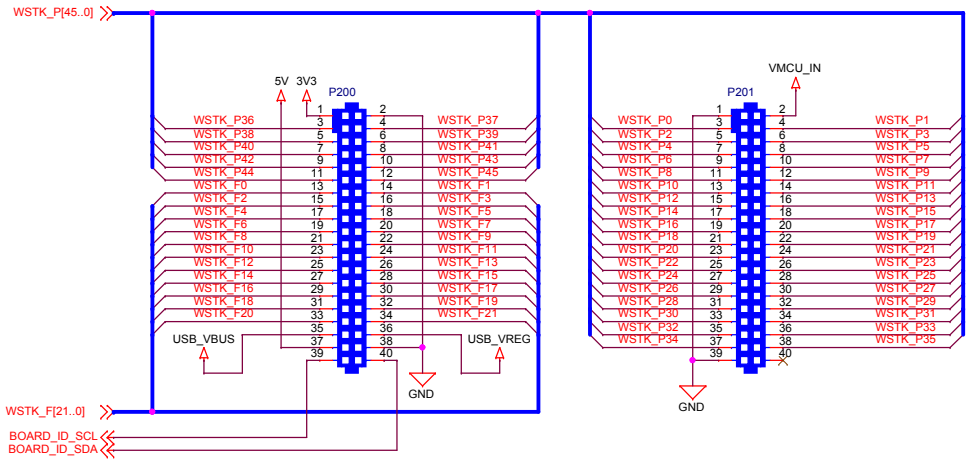

Board Identification

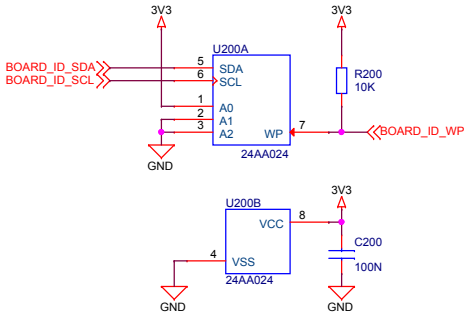

Test Points

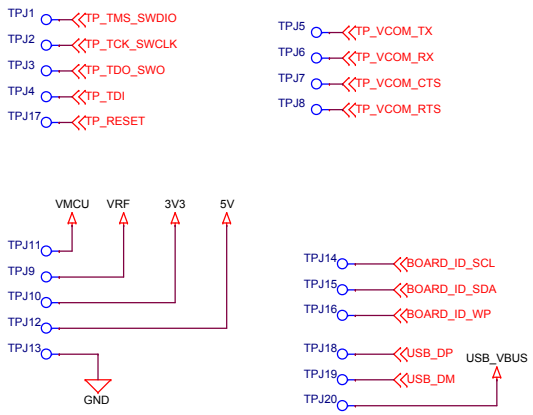

SILICON LABS	Board Name: **FG25 470 MHz 16 dBm Radio Board**	
	Page Title: **WSTK Connectors & Board ID**	
Designed: TAB / Approved: RGU	Board Number: **BRD4272A**	Revision: **A02**
Size: A3 / Sheet Modified Date: Thursday, August 18, 2022		
		Sheet: 5 of 5

COPYRIGHT SILICON LABORATORIES INC. 2020 CONFIDENTIAL – SUBJECT TO TERMS OF USE