EFM32 Giant Gecko STK

Board Function	Page
Title Page	1
User Interface	2
Signal Assignments	3
EFM32 I/O	4
EFM32 Power	5
LCD	6
Power & Misc	7
Advanced Energy Monitor	8
Debug Interface	9
Control MCU	10

Revision History

Rev.	Description
A00	Incorporated new AEM solution. Added capacitor for backup power domain.
A01	Cleanup of unused parts. Removed legacy AEM and sense range 3.
A02	Updated EFM32 to Giant Gecko Rev.D

PCB1

PCB2200

TOP

Schematic Title: EFM32 Giant Gecko Starter Kit		
Page Title: Title Page		
Designed: DDB	Approved: JNO	
Document number: BRD2200A		Revision: A02
Size: A3	BOM Doc No:	
Design Created Date: Wednesday, December 03, 2008	Sheet Created Date: Saturday, March 21, 2009	Sheet Modified Date: Wednesday, April 25, 2012
		Sheet 1 of 10

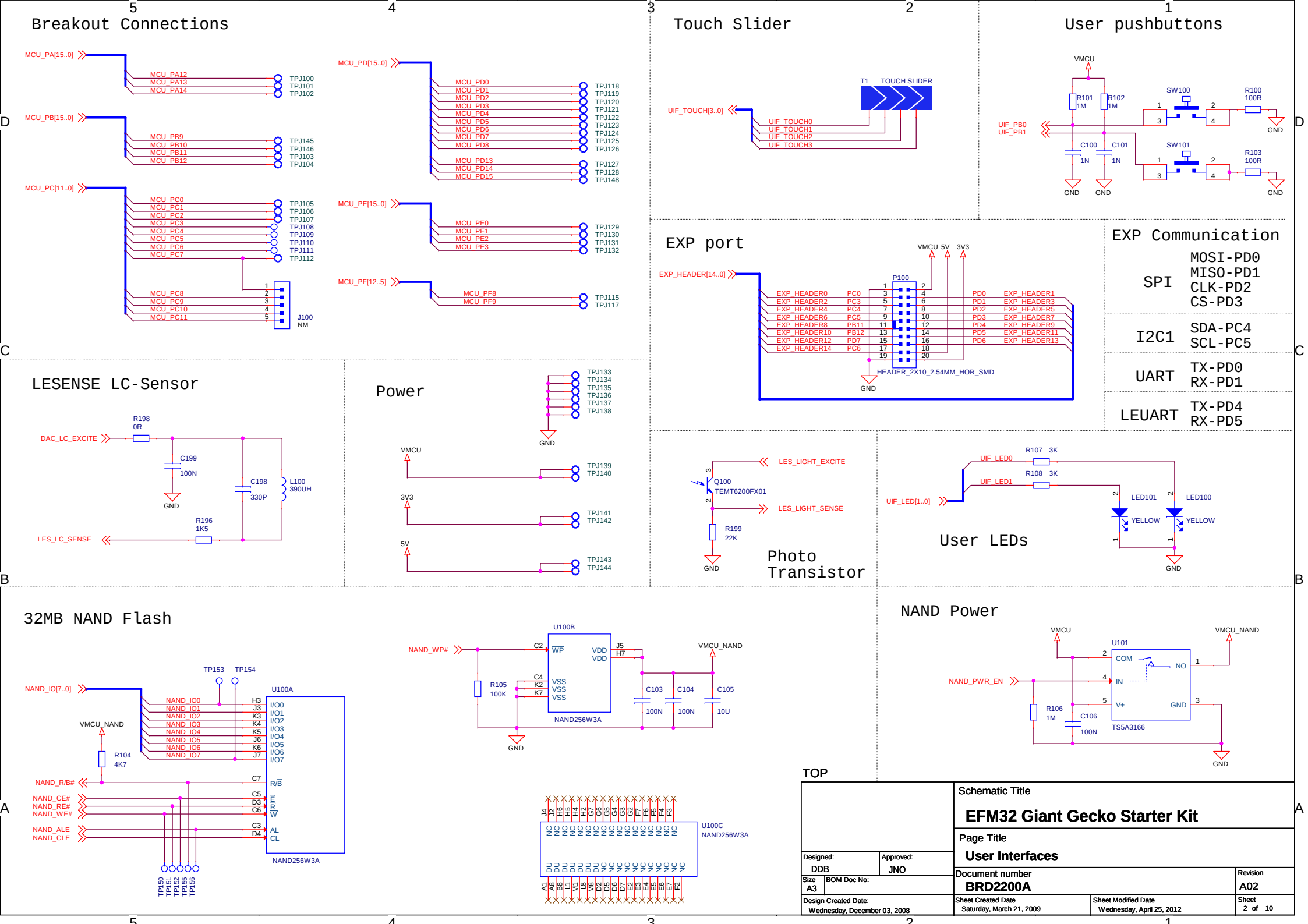
Breakout Connections
MCU_PA[15..0]
MCU_PA12
MCU_PA13
MCU_PA14
TPJ100
TPJ101
TPJ102
MCU_PB[15..0]
MCU_PB9
MCU_PB10
MCU_PB11
MCU_PB12
TPJ145
TPJ146
TPJ103
TPJ104
MCU_PC[11..0]
MCU_PC0
MCU_PC1
MCU_PC2
MCU_PC3
MCU_PC4
MCU_PC5
MCU_PC6
MCU_PC7
TPJ105
TPJ106
TPJ107
TPJ108
TPJ109
TPJ110
TPJ111
TPJ112
MCU_PC8
MCU_PC9
MCU_PC10
MCU_PC11
J100
NM
MCU_PD[15..0]
MCU_PD0
MCU_PD1
MCU_PD2
MCU_PD3
MCU_PD4
MCU_PD5
MCU_PD6
MCU_PD7
MCU_PD8
MCU_PD13
MCU_PD14
MCU_PD15
TPJ118
TPJ119
TPJ120
TPJ121
TPJ122
TPJ123
TPJ124
TPJ125
TPJ126
TPJ127
TPJ128
TPJ148
MCU_PE[15..0]
MCU_PE0
MCU_PE1
MCU_PE2
MCU_PE3
TPJ129
TPJ130
TPJ131
TPJ132
MCU_PF[12..5]
MCU_PF8
MCU_PF9
TPJ115
TPJ117
Touch Slider
UIF_TOUCH[3..0]
UIF_TOUCH0
UIF_TOUCH1
UIF_TOUCH2
UIF_TOUCH3
T1
TOUCH SLIDER
User pushbuttons
VMCU
R101
1M
R102
1M
SW100
R100
100R
UIF_PB0
UIF_PB1
C100
1N
C101
1N
SW101
R103
100R
GND
EXP port
EXP_HEADER[14..0]
VMCU 5V
3V3
P100
EXP_HEADER0
EXP_HEADER2
EXP_HEADER4
EXP_HEADER6
EXP_HEADER8
EXP_HEADER10
EXP_HEADER12
EXP_HEADER14
PC0
PC3
PC4
PC5
PB11
PB12
PD7
PC6
PD0
PD1
PD2
PD3
PD4
PD5
PD6
EXP_HEADER1
EXP_HEADER3
EXP_HEADER5
EXP_HEADER7
EXP_HEADER9
EXP_HEADER11
EXP_HEADER13
HEADER_2X10_2.54MM_HOR_SMD
EXP Communication
SPI
MOSI-PD0
MISO-PD1
CLK-PD2
CS-PD3
I2C1
SDA-PC4
SCL-PC5
UART
TX-PD0
RX-PD1
LEUART
TX-PD4
RX-PD5
LESENSE LC-Sensor
DAC_LC_EXCITE
R198
0R
C199
100N
C198
330P
L100
390UH
R196
1K5
LES_LC_SENSE
Power
TPJ133
TPJ134
TPJ135
TPJ136
TPJ137
TPJ138
VMCU
TPJ139
TPJ140
3V3
TPJ141
TPJ142
5V
TPJ143
TPJ144
LES_LIGHT_EXCITE
Q100
TEMT6200FX01
LES_LIGHT_SENSE
R199
22K
Photo Transistor
UIF_LED[1..0]
UIF_LED0
UIF_LED1
R107 3K
R108 3K
LED101
LED100
YELLOW
User LEDs
32MB NAND Flash
NAND_IO[7..0]
TP153
TP154
U100A
NAND_IO0
NAND_IO1
NAND_IO2
NAND_IO3
NAND_IO4
NAND_IO5
NAND_IO6
NAND_IO7
VMCU_NAND
R104
4K7
NAND_R/B#
NAND_CE#
NAND_RE#
NAND_WE#
NAND_ALE
NAND_CLE
NAND256W3A
TP150
TP151
TP152
TP155
TP156
NAND_WP#
U100B
R105
100K
C103
100N
C104
100N
C105
10U
U100C
NAND256W3A
NAND Power
U101
NAND_PWR_EN
R106
1M
C106
100N
TS5A3166
TOP
Schematic Title
EFM32 Giant Gecko Starter Kit
Page Title
User Interfaces
Designed: DDB
Approved: JNO
Size A3
BOM Doc No:
Document number BRD2200A
Revision A02
Design Created Date: Wednesday, December 03, 2008
Sheet Created Date Saturday, March 21, 2009
Sheet Modified Date Wednesday, April 25, 2012
Sheet 2 of 10

PA Connections

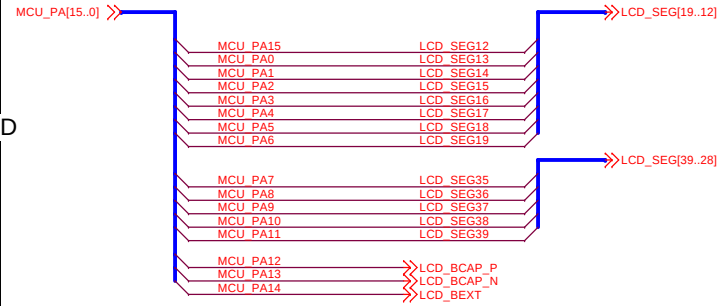

PB Connections

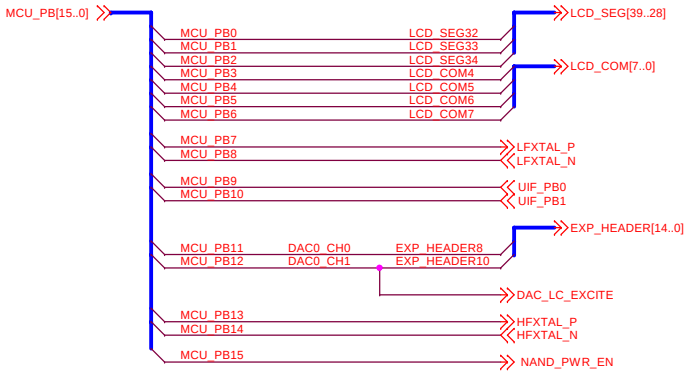

OPAMP Connection Footprint

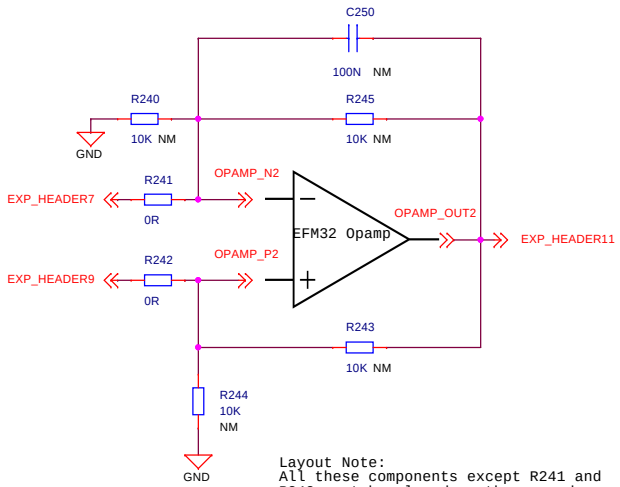

Layout Note:
All these components except R241 and R242 must be placed on the secondary side, and are not to be mounted in production.

PC Connections

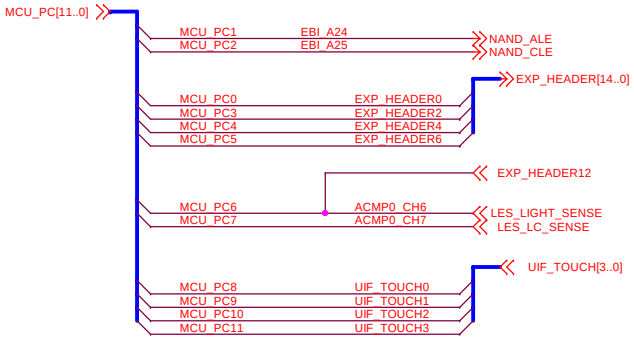

PD Connections

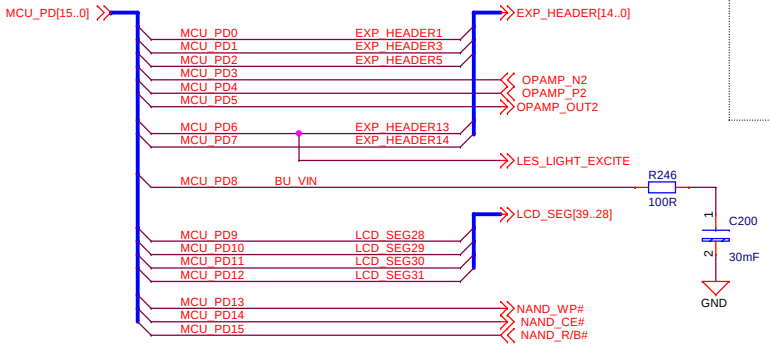

Capacitor for Backup Power Domain

PE Connections

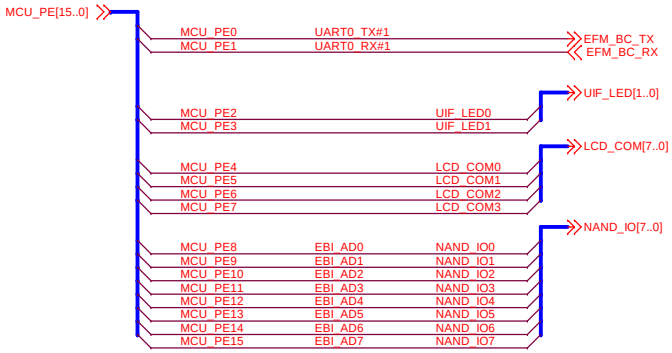

PF Connections

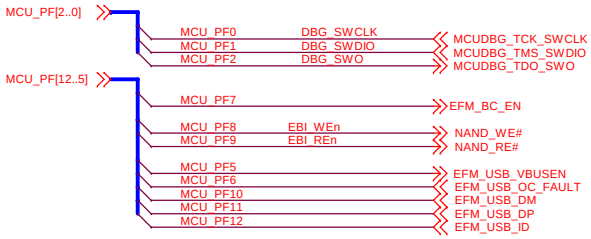

19-pin JTAG/SWD and Trace connector footprint (reverse side)

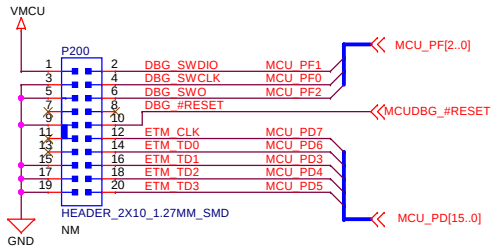

TOP

Schematic Title	**EFM32 Giant Gecko Starter Kit**	
Page Title	**Signal Assignments**	
Designed: DDB	Approved: JNO	
Size A3	BOM Doc No: <Cage Code>	
Document number	**BRD2200A**	Revision A02
Design Created Date: Wednesday, December 03, 2008	Sheet Created Date Friday, January 15, 2010	Sheet Modified Date Wednesday, April 25, 2012
		Sheet 3 of 10

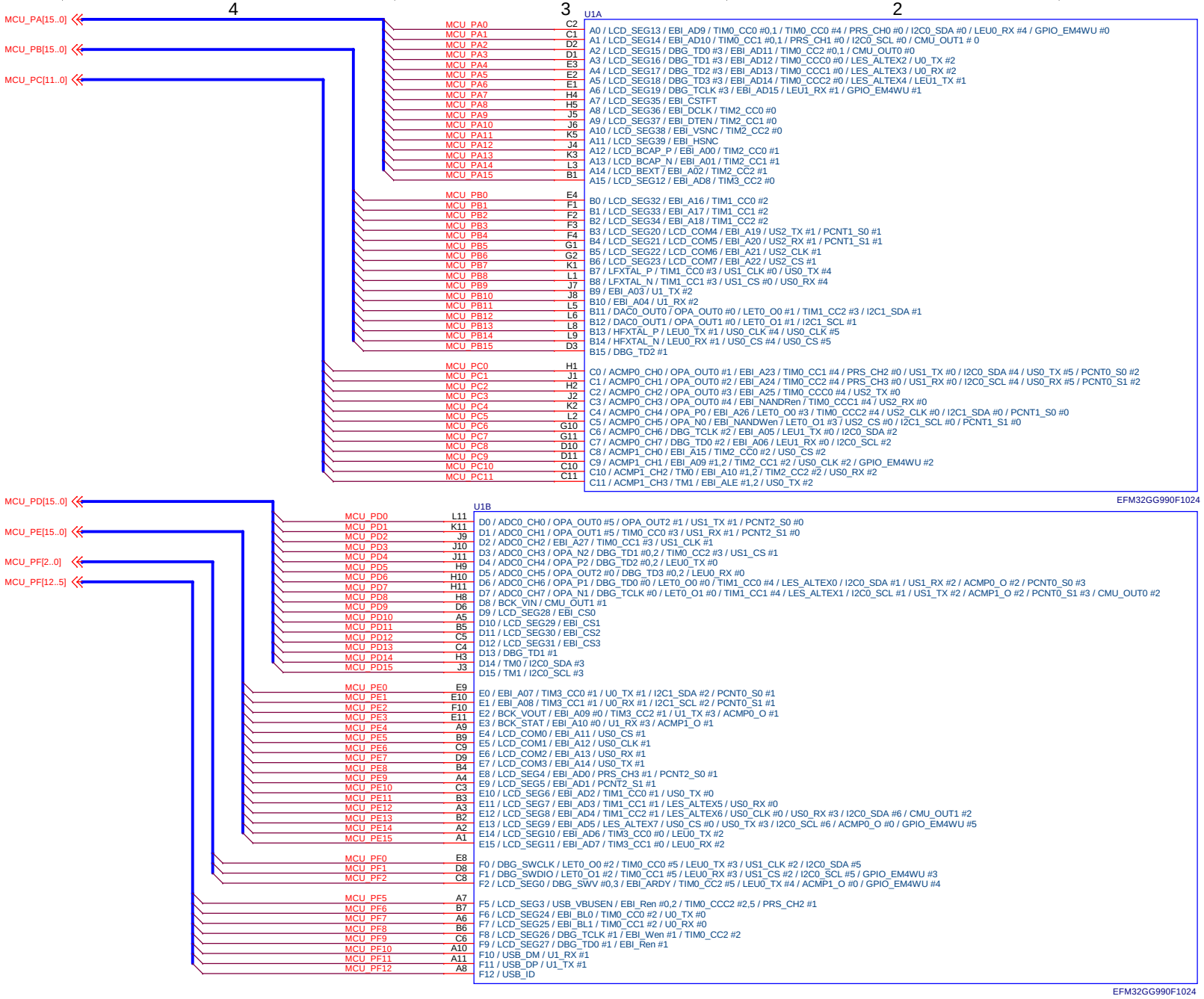

Schematic Title	**EFM32 Giant Gecko Starter Kit**		
Page Title	**EFM32 I/O**		
Designed: DDB	Approved: JNO		
Size A3	BOM Doc No: <Cage Code>	Document number **BRD2200A**	Revision A02
Design Created Date: Wednesday, December 03, 2008	Sheet Created Date Tuesday, January 12, 2010	Sheet Modified Date Wednesday, April 25, 2012	Sheet 4 of 10

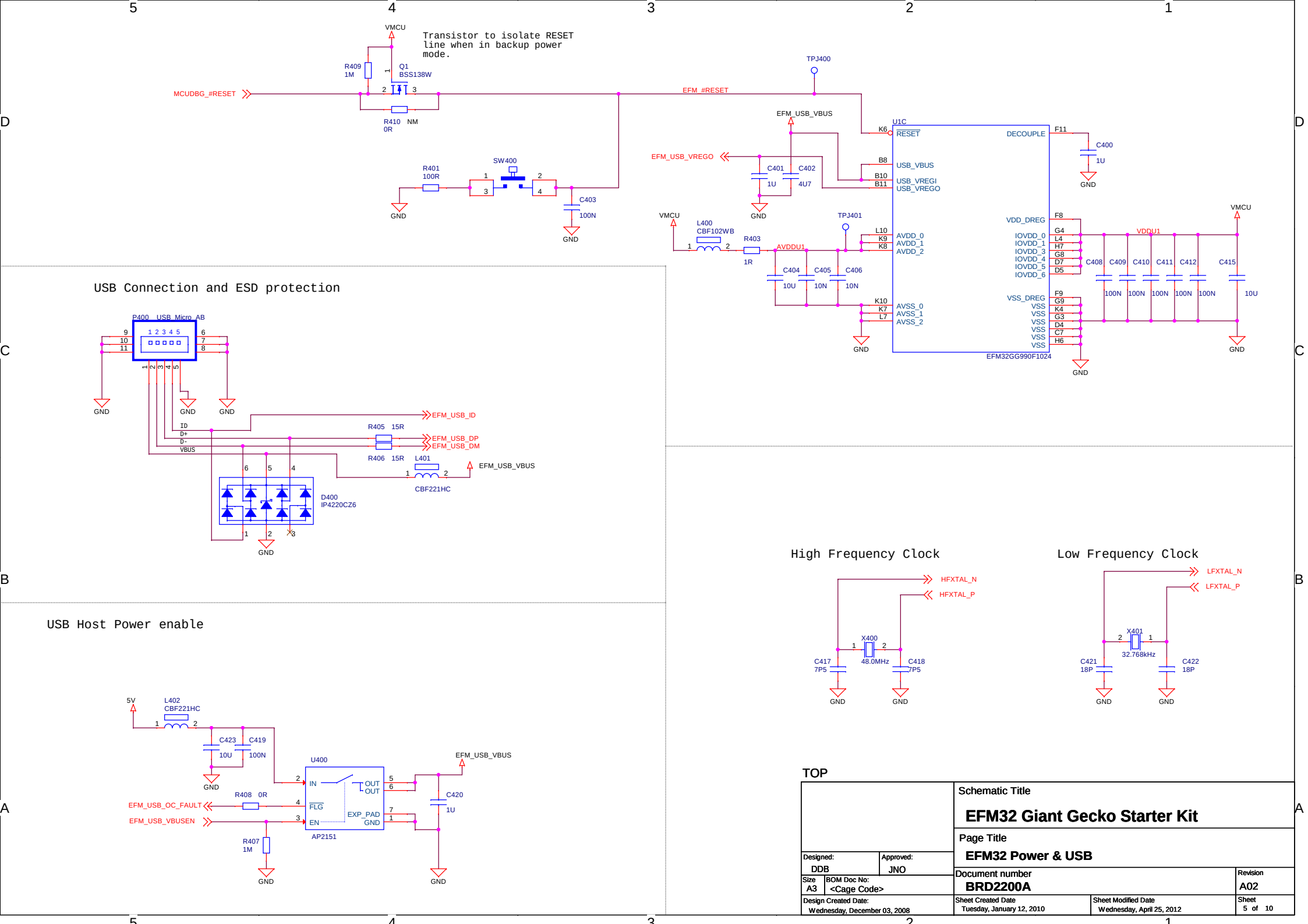

Schematic Title	EFM32 Giant Gecko Starter Kit
Page Title	EFM32 Power & USB
Designed: DDB	Approved: JNO
Size A3	BOM Doc No: <Cage Code>
Document number	BRD2200A
Revision	A02
Design Created Date:	Wednesday, December 03, 2008
Sheet Created Date	Tuesday, January 12, 2010
Sheet Modified Date	Wednesday, April 25, 2012
Sheet	5 of 10

LCD signal connections

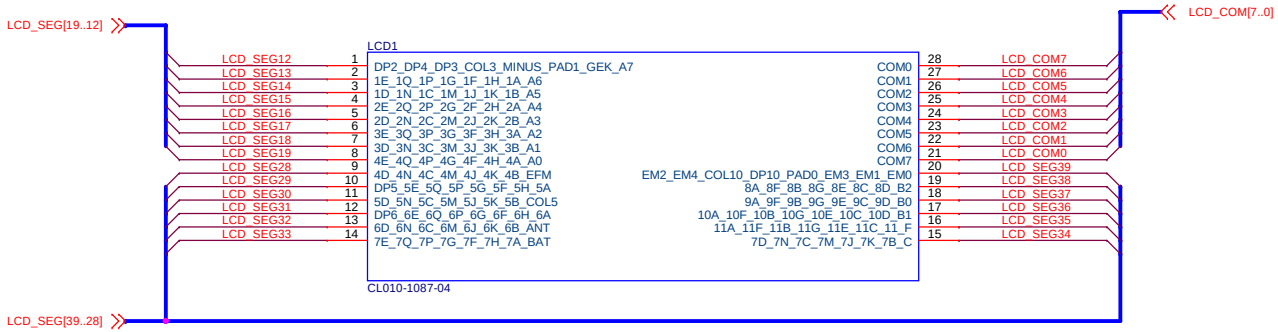

LCD Boost

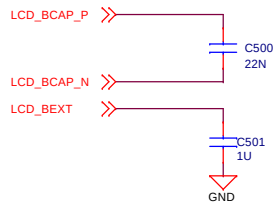

Segment names

PIN	1	2	3	4	5	6	7	8	9	10	11	12	13	14
——	S0	S1	S2	S3	S4	S5	S6	S7	S8	S9	S10	S11	S12	S13
COM0	DP2	1 E	1 D	2 E	2 D	3 E	3 D	4 E	4 D	DP5	5 D	DP6	6 D	7 E
COM1	DP4	1 Q	1 N	2 Q	2 N	3 Q	3 N	4 Q	4 N	5 E	5 N	6 E	6 N	7 Q
COM2	DP3	1 P	1 C	2 P	2 C	3 P	3 C	4 P	4 C	5 Q	5 C	6 Q	6 C	7 P
COM3	COL3	1 G	1 M	2 G	2 M	3 G	3 M	4 G	4 M	5 P	5 M	6 P	6 M	7 G
COM4	MINUS	1 F	1 J	2 F	2 J	3 F	3 J	4 F	4 J	5 G	5 J	6 G	6 J	7 F
COM5	PAD1	1 H	1 K	2 H	2 K	3 H	3 K	4 H	4 K	5 F	5 K	6 F	6 K	7 H
COM6	GEK	1 A	1 B	2 A	2 B	3 A	3 B	4 A	4 B	5 H	5 B	6 H	6 B	7 A
COM7	A7	A6	A5	A4	A3	A2	A1	A0	EFM	5 A	COL5	6 A	ANT	BAT

PIN	15	16	17	18	19	20	21	22	23	24	25	26	27	28
——	S14	S15	S16	S17	S18	S19	COM7	COM6	COM5	COM4	COM3	COM2	COM1	COM0
COM0	7 D	11 A	10 A	9 A	8 A	EM2								COM0
COM1	7 N	11 F	10 F	9 F	8 F	EM4							COM1	
COM2	7 C	11 B	10 B	9 B	8 B	COL10						COM2		
COM3	7 M	11 G	10 G	9 G	8 G	DP10					COM3			
COM4	7 J	11 E	10 E	9 E	8 E	PAD0				COM4				
COM5	7 K	11 C	10 C	9 C	8 C	EM3			COM5					
COM6	7 B	11 D	10 D	9 D	8 D	EM1		COM6						
COM7	°C	°F	B1	B0	B2	EM0	COM7							

Segment placement

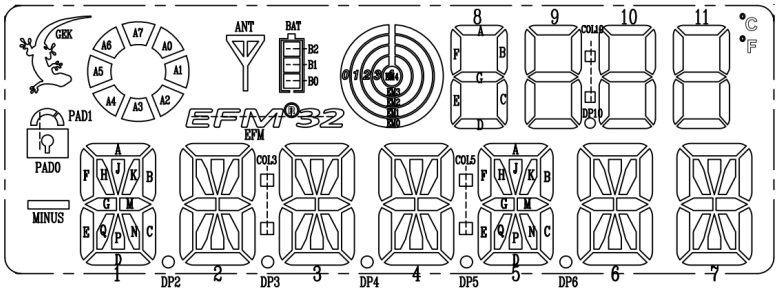

TOP

Schematic Title: **EFM32 Giant Gecko Starter Kit**		
Page Title: **LCD**		
Designed: DDB	Approved: JNO	Document number: **BRD2200A**	Revision: A02
Size: A3	BOM Doc No: <Cage Code>		
Design Created Date: Wednesday, December 03, 2008	Sheet Created Date: Tuesday, January 12, 2010	Sheet Modified Date: Wednesday, April 25, 2012	Sheet 6 of 10

Power input

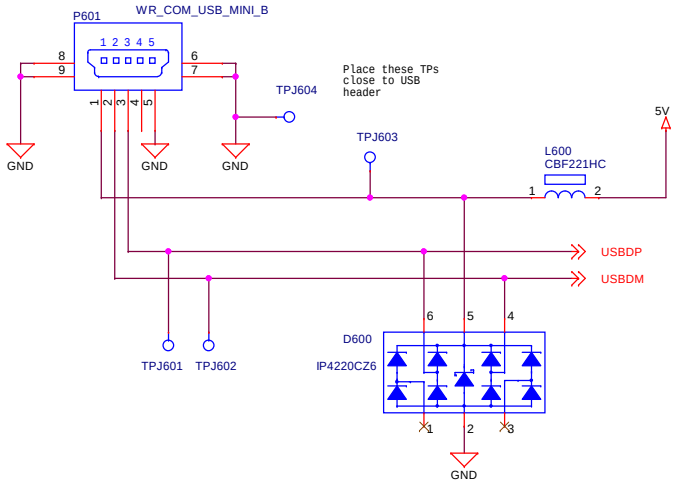

3V3 Regulator

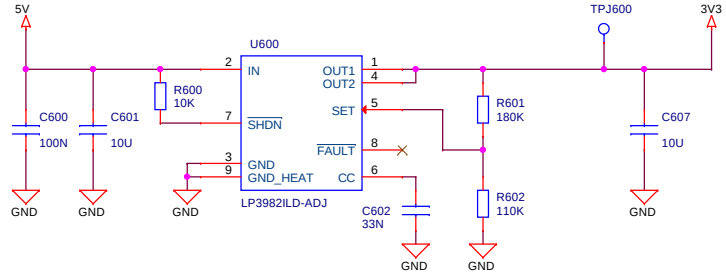

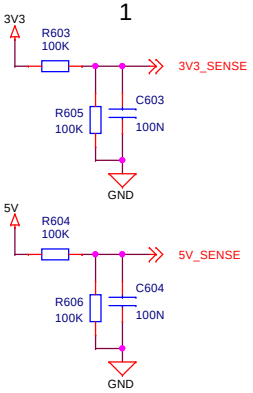

VMCU_DBG power

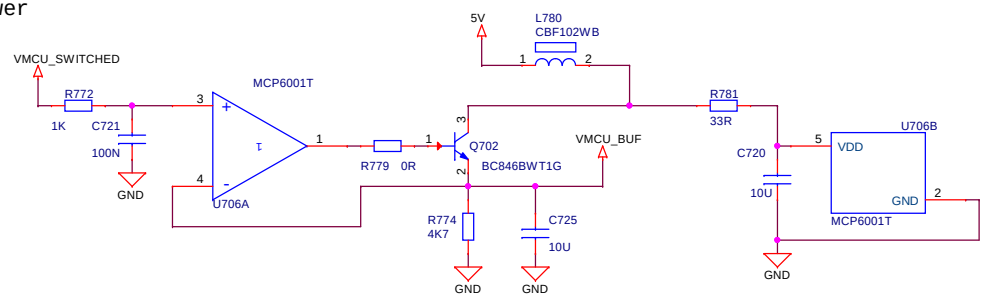

VMCU switch

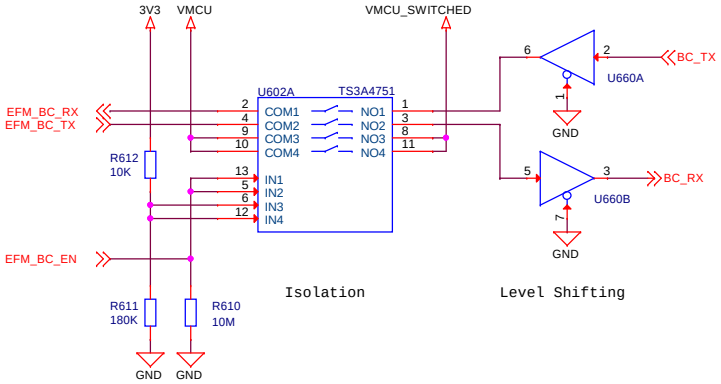

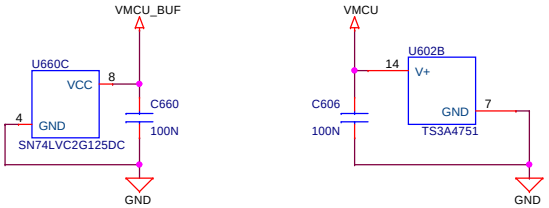

User input to control mcu

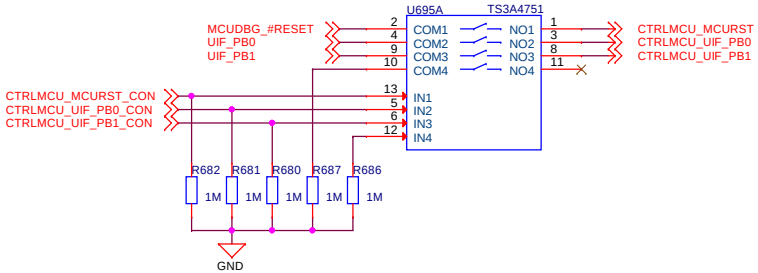

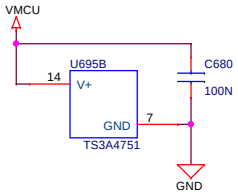

CTRLMCU EEPROM

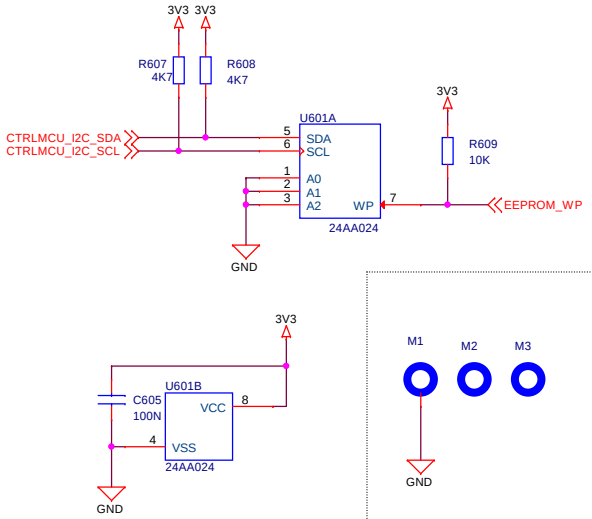

TOP

Schematic Title	**EFM32 Giant Gecko Starter Kit**	
Page Title	**Power & Misc**	
Designed: DDB	Approved: JNO	
Size A3	BOM Doc No: <Cage Code>	Document number **BRD2200A** — Revision A02
Design Created Date: Wednesday, December 03, 2008	Sheet Created Date Saturday, March 21, 2009	Sheet Modified Date Wednesday, April 25, 2012 — Sheet 7 of 10

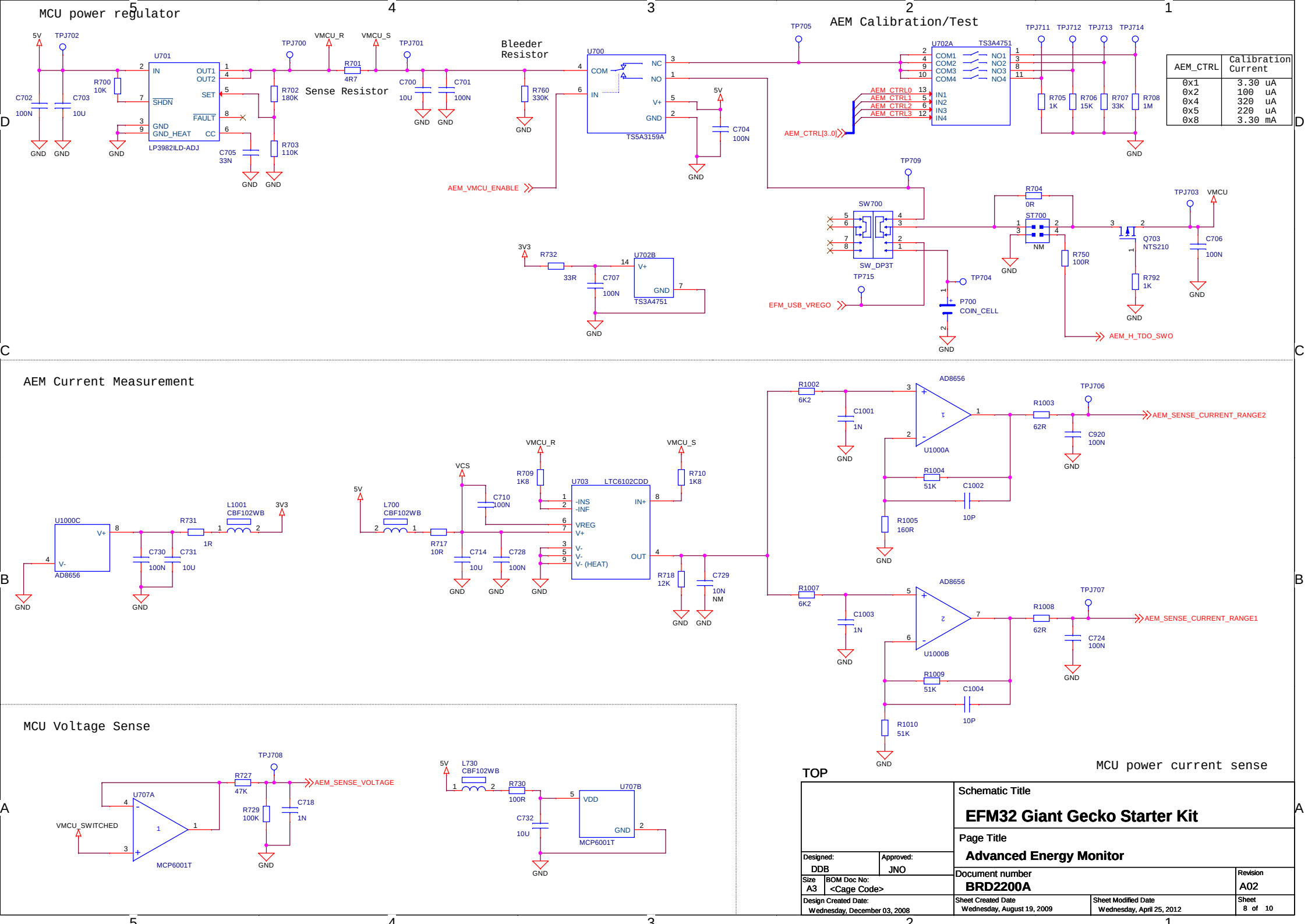

AEM_CTRL	Calibration Current
0x1	3.30 uA
0x2	100 uA
0x4	320 uA
0x5	220 uA
0x8	3.30 mA

Schematic Title: **EFM32 Giant Gecko Starter Kit**			
Page Title: **Advanced Energy Monitor**			
Designed: DDB	Approved: JNO	Document number: **BRD2200A**	Revision: A02
Size: A3	BOM Doc No: <Cage Code>		
Design Created Date: Wednesday, December 03, 2008		Sheet Created Date: Wednesday, August 19, 2009	Sheet Modified Date: Wednesday, April 25, 2012
			Sheet 8 of 10

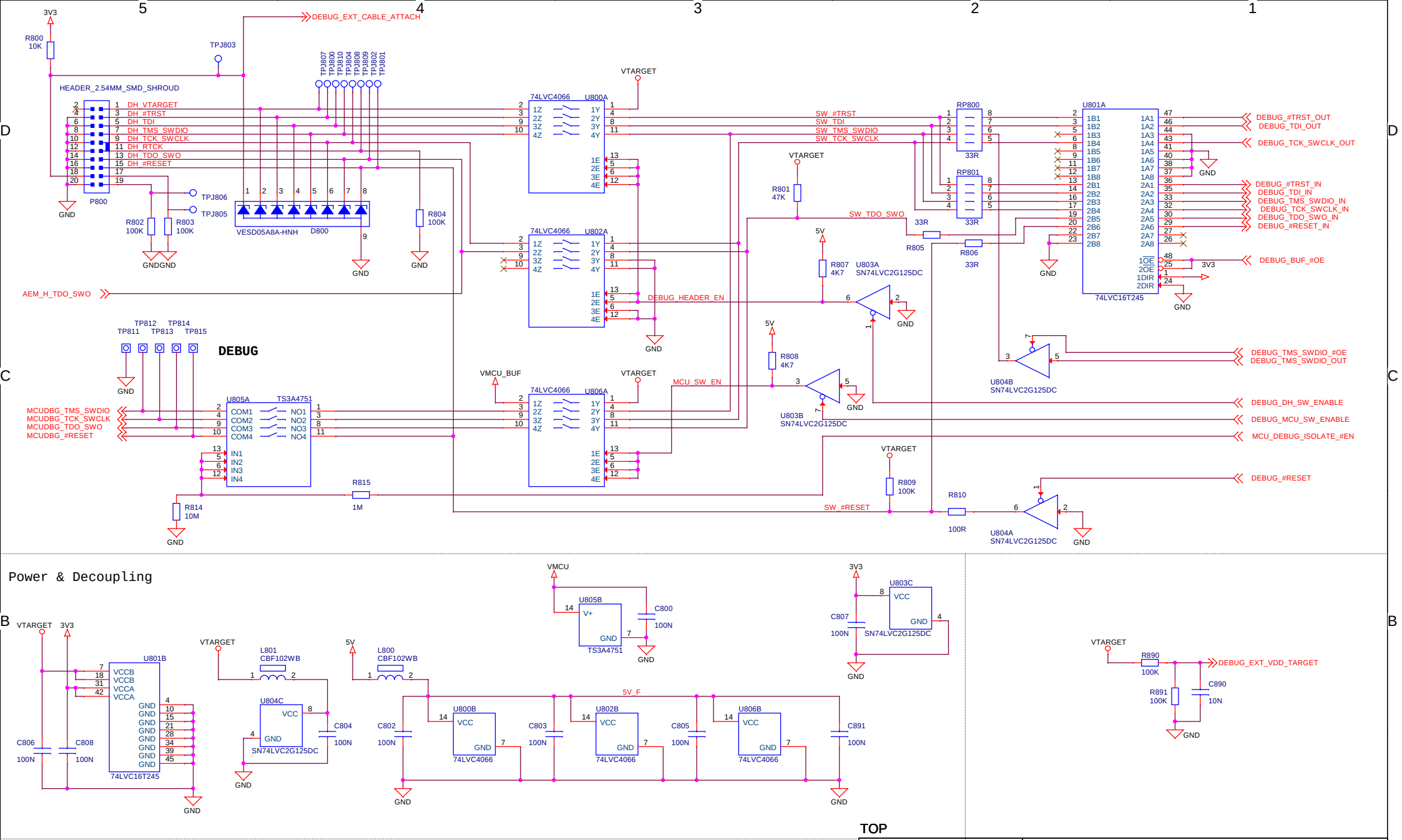

Mode	DEBUG_MCU_SW_ENABLE	DEBUG_DH_SW_ENABLE	DEBUG_BUF_#OE	ISOLATE_#EN	DH_VTARGET	VTARGET
Debug Out	0	1	0	0	External voltage	External voltage
MCU Debug	1	0	0	1	Disconnected	VMCU
Debug In	1	1	1	1	VMCU	VMCU
Debug Off	1	1	1	0	-	-

Designed: DDB	Approved: JNO	Schematic Title: **EFM32 Giant Gecko Starter Kit**
Size: A3	BOM Doc No: <Cage Code>	Page Title: **Debug Interface**
Design Created Date: Wednesday, December 03, 2008		Document number: **BRD2200A**
Sheet Created Date: Saturday, March 21, 2009	Sheet Modified Date: Wednesday, April 25, 2012	Revision: A02
		Sheet 9 of 10

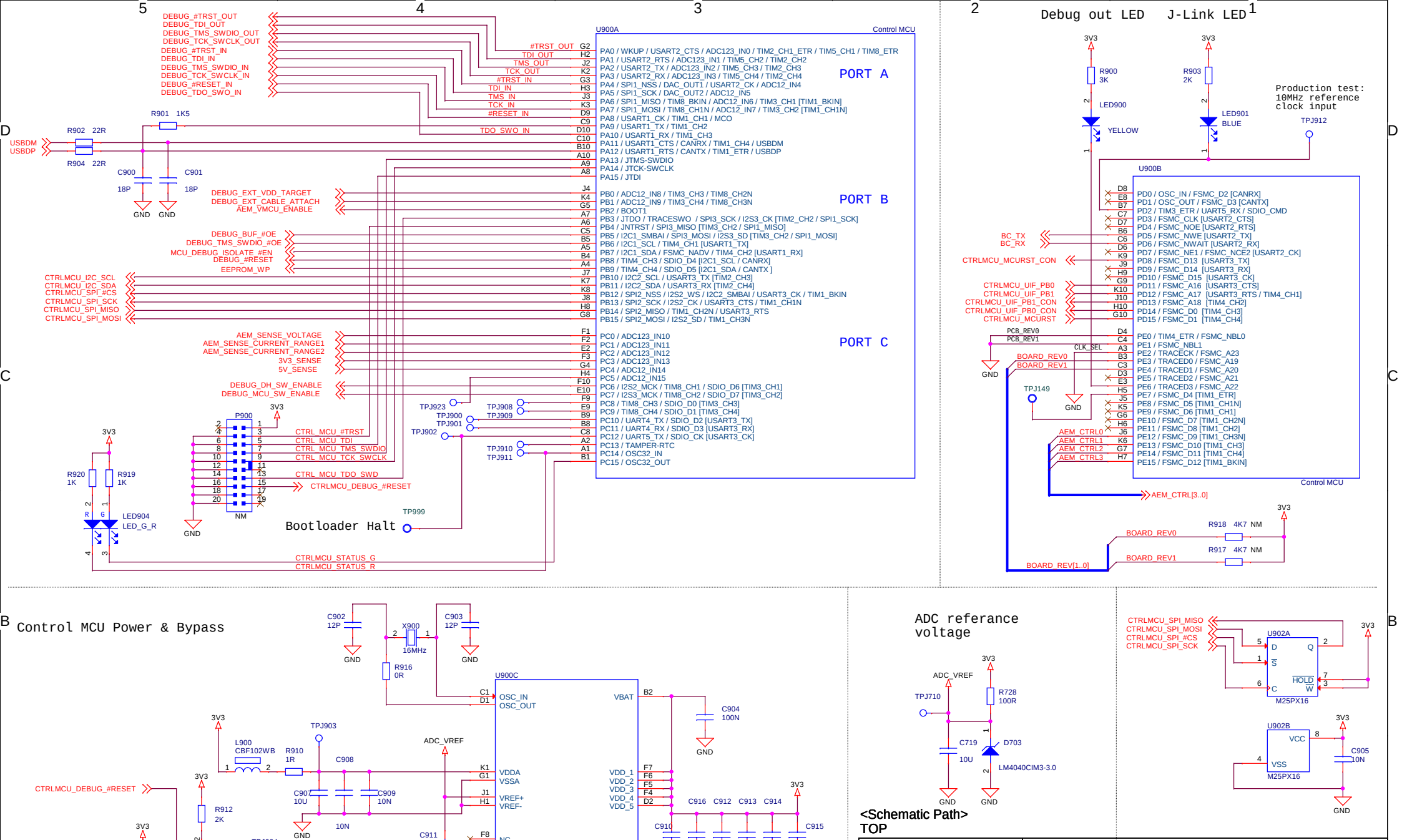

Schematic Title	**EFM32 Giant Gecko Starter Kit**
Page Title	**Control MCU**
Designed: DDB	Approved: JNO
Document number	**BRD2200A**
Revision	A02
Size A3	BOM Doc No: <Cage Code>
Design Created Date:	Wednesday, December 03, 2008
Sheet Created Date	Saturday, March 21, 2009
Sheet Modified Date	Wednesday, April 25, 2012
Sheet	10 of 10