EFM32 Happy Gecko STK

Board Function	Page
Title Page	1
User Interface	2
EFM32 Signal Assignments	3
EFM32 Power & I/O	4
Board Controller	5
STK Common Interface	6
STK Common/Power & Misc	7
STK Common/AEM	8
STK Common/Debug Interface	9
STK Common/Board Controller	10

Revision History

Rev.	Description
A00	First production release.
B00	Updated Board Controller pin-out.

PCB1

PCB2012

/
EFM32 HG STK

Designed: JSH	Approved: JNO	Schematic Title: **EFM32 Happy Gecko Starter Kit**
Size: A3	BOM Doc No: <Cage Code>	Page Title: **Title Page**
Design Created Date: Wednesday, December 03, 2008		Document number: **BRD2012A** — Revision: B00
		Sheet Created Date: Saturday, March 21, 2009 — Sheet Modified Date: Wednesday, March 11, 2015 — Sheet 1 of 10

User LEDs

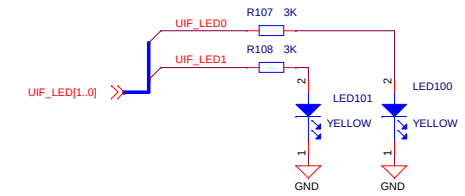

Touch Pads

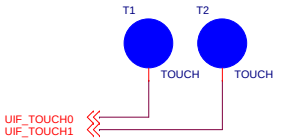

EXP Header

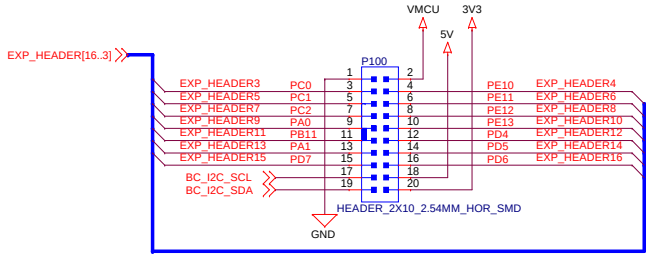

EXP-Header Functionality

1	GND		
3	PC0		ACMP0_CH0
5	PC1		ACMP0_CH1
7	PC2		ACMP0_CH2
9	PA0		
11	PB11		IDAC0_OUT
13	PA1		
15	PD7	I2C0_SCL	ADC0_CH7
17	Reserved for EXP Board Identification		
19	Reserved for EXP Board Identification		

2	VMCU		
4	PE10	US1_TX	
6	PE11	US1_RX	
8	PE12	US1_CLK	ADC0_CH0
10	PE13	US1_CS	ADC0_CH1
12	PD4	LEU0_TX	ADC0_CH4
14	PD5	LEU0_RX	ADC0_CH5
16	PD6	I2C0_SDA	ADC0_CH6
18	5V		
20	3V3		

User Pushbuttons

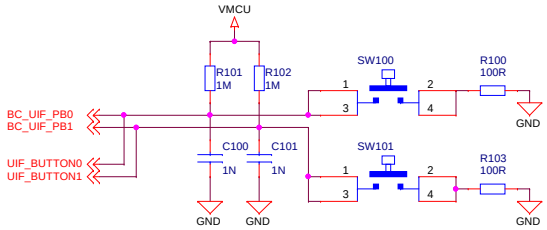

RESET Pushbutton

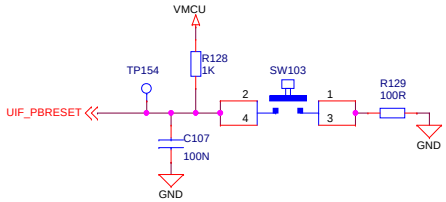

Memory LCD-TFT Display & Multiplexer

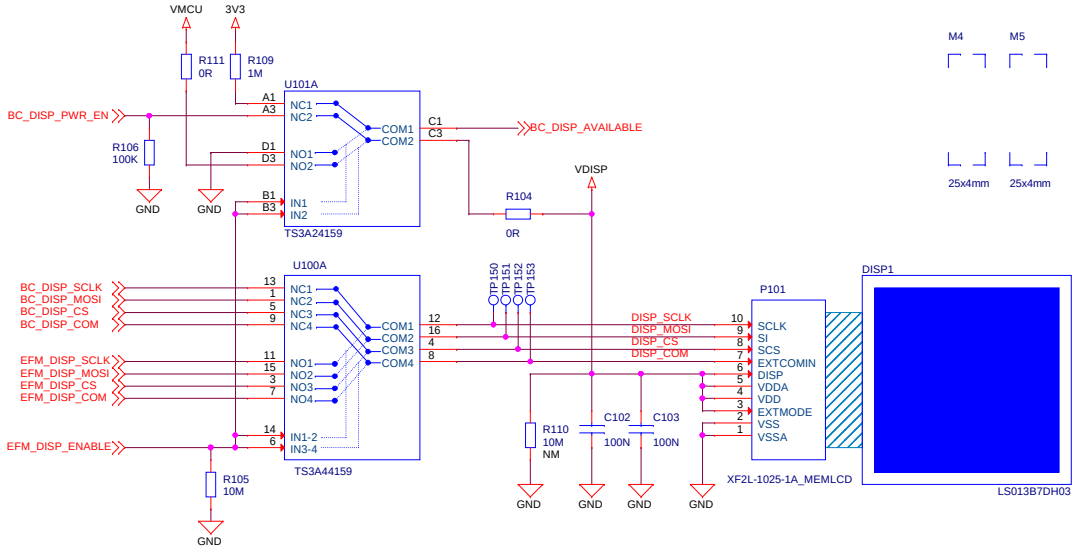

EFM_DISP_ENABLE	DISP_CTRL	VDISP	BC_DISP_AVAILABLE
1	EFM	VMCU	0
0	BC	BC_DISP_PWR_EN	1

The EFM32 always controls ownership of the display using the EFM_DISP_ENABLE signal.

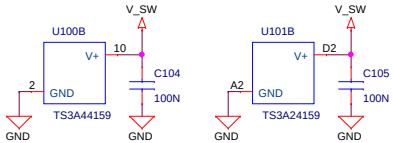

Relative Humidity & Temperature Sensor

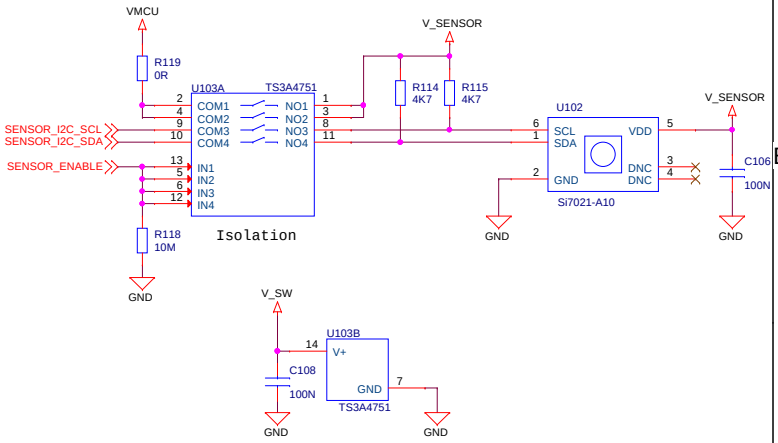

EFM32 HG STK

Schematic Title	EFM32 Happy Gecko Starter Kit
Page Title	User Interfaces
Designed: JSH	Approved: JNO
Size A3	BOM Doc No:
Document number	BRD2012A
Revision	B00
Design Created Date:	Wednesday, December 03, 2008
Sheet Created Date	Friday, October 31, 2014
Sheet Modified Date	Friday, March 06, 2015
Sheet	2 of 10

Breakout Connections

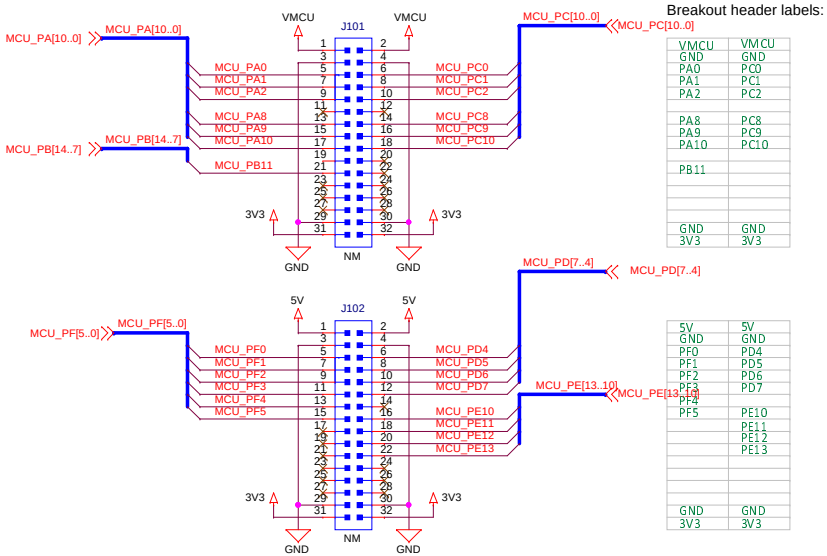

PA Connections

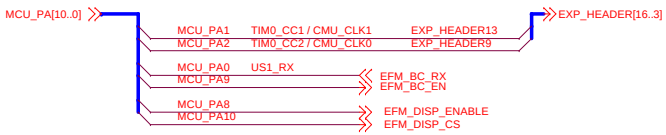

PB Connections

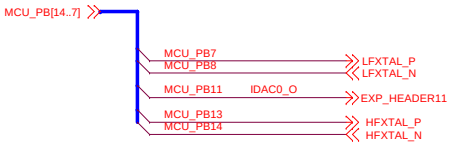

PE Connections

PE10 - PE13 (USART1) are used for the EXP Header
SPI port as well as the display clock and data.

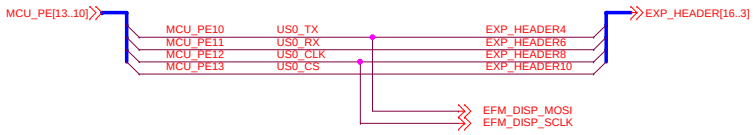

PC Connections

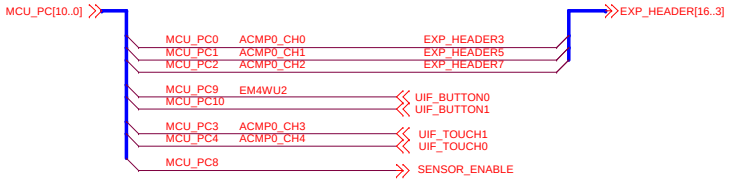

PF Connections

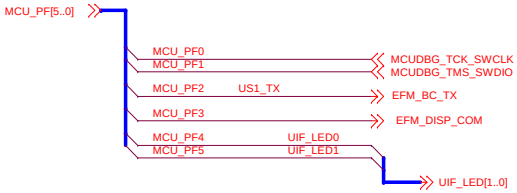

PD Connections

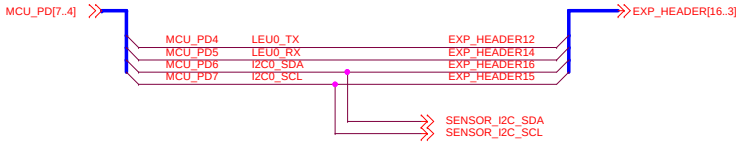

SILICON LABS	Schematic Title: **EFM32 Happy Gecko Starter Kit**		
	Page Title: **Signal Assignments**		
Designed: JSH	Approved: JNO	Document number: **BRD2012A**	Revision: B00
Size: A3	BOM Doc No: <Cage Code>		
Design Created Date: Wednesday, December 03, 2008	Sheet Created Date: Friday, October 31, 2014	Sheet Modified Date: Friday, March 06, 2015	Sheet 3 of 10

Power Select Switch: AEM/USB/BAT

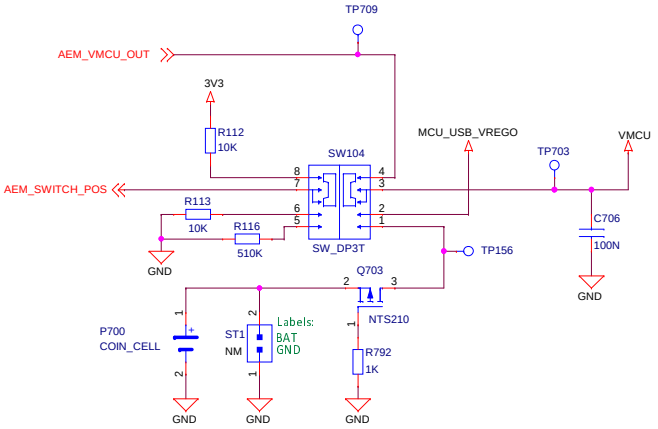

SWITCH POS	MODE DESCRIPTION
AEM	AEM Enabled, VMCU sourced from external 3.3V LDO powered by BC USB 5V supply
USB	AEM Enabled. VMCU sourced from internal 3.3V LDO powered by MCU USB 5V supply
BAT	AEM Disabled, VMCU sourced from coin-cell battery or external power supply

USB Connection and ESD Protection

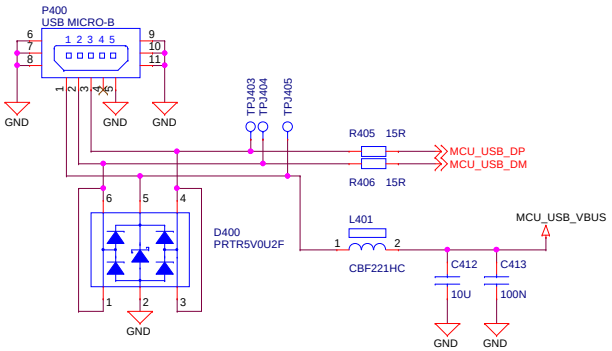

EFM32 Power and Decoupling

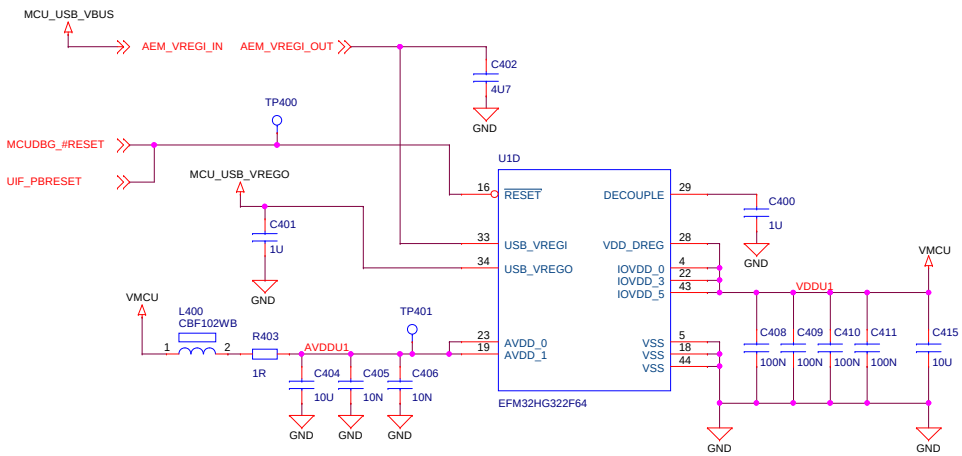

Schematic Title	EFM32 Happy Gecko Starter Kit
Page Title	EFM32 Power and USB
Designed: JSH	Approved: JNO
Size A3	BOM Doc No: <Cage Code>
Document number	BRD2012A
Revision	B00
Design Created Date:	Wednesday, December 03, 2008
Sheet Created Date	Friday, October 31, 2014
Sheet Modified Date	Tuesday, March 10, 2015
Sheet	4 of 10

EFM32 HG MCU

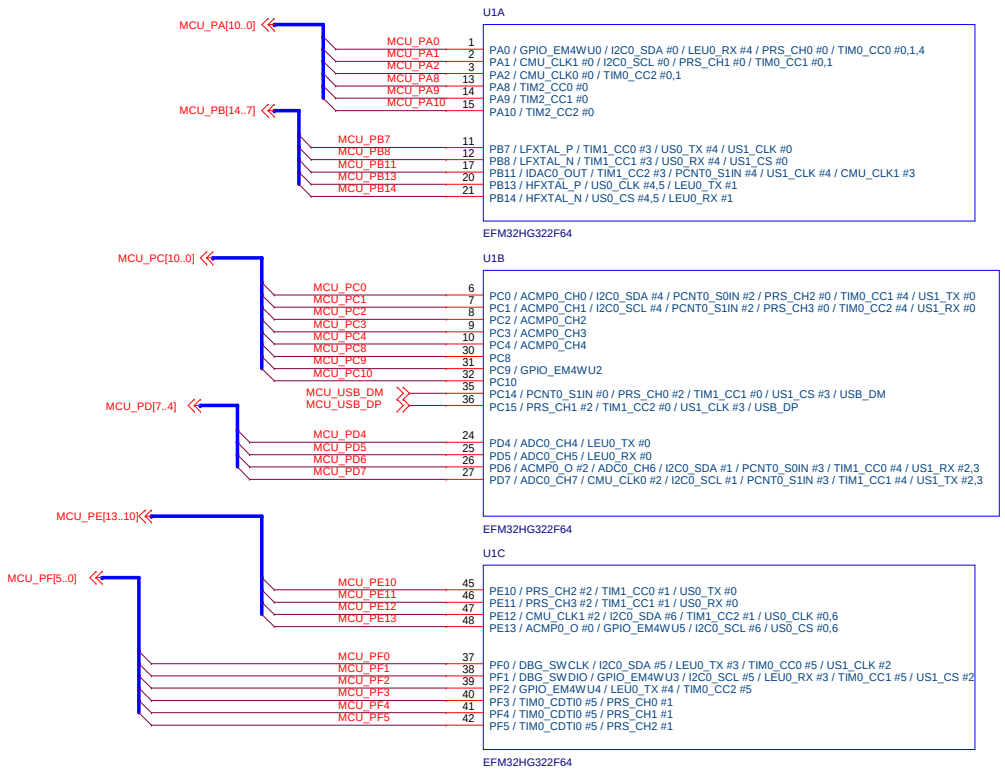

High Frequency Clock

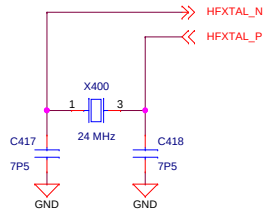

Low Frequency Clock

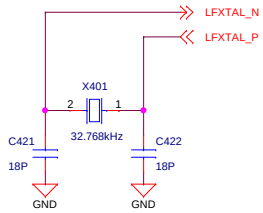

SILICON LABS	Schematic Title: **EFM32 Happy Gecko Starter Kit**	
	Page Title: **EFM32 HG I/O**	
Designed: JSH / Approved: JNO	Document number: **BRD2012A**	Revision: B00
Size: A3 / BOM Doc No: <Cage Code>		
Design Created Date: Wednesday, December 03, 2008	Sheet Created Date: Monday, November 17, 2014 / Sheet Modified Date: Friday, March 06, 2015	Sheet 4 of 5

Board Controller Functional Block

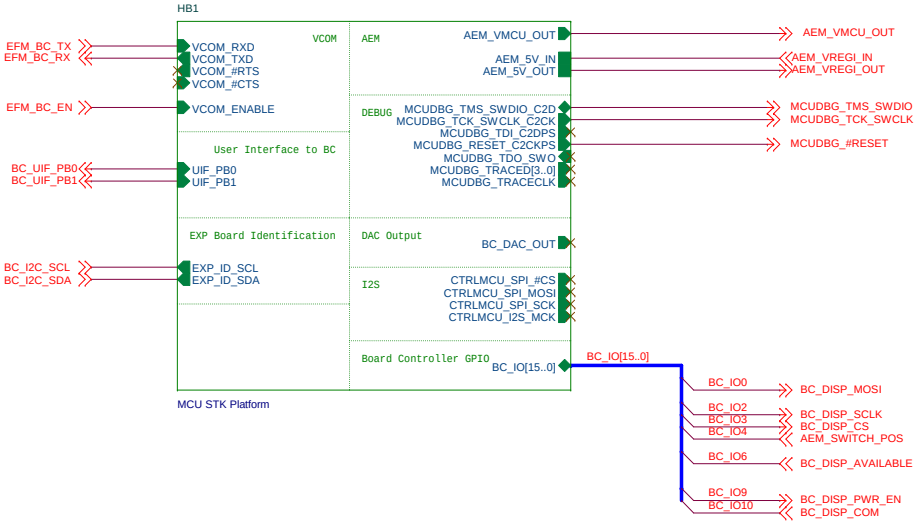

SILICON LABS	Schematic Title: **EFM32 Happy Gecko Starter Kit**	
	Page Title: **Board Controller Functional Block**	
Designed: JSH	Approved: JNO	
Size: A3	BOM Doc No: <Cage Code>	Document number: **BRD2012A** — Revision: B00
Design Created Date: Wednesday, December 03, 2008	Sheet Created Date: Friday, October 31, 2014	Sheet Modified Date: Friday, March 06, 2015 — Sheet 5 of 10

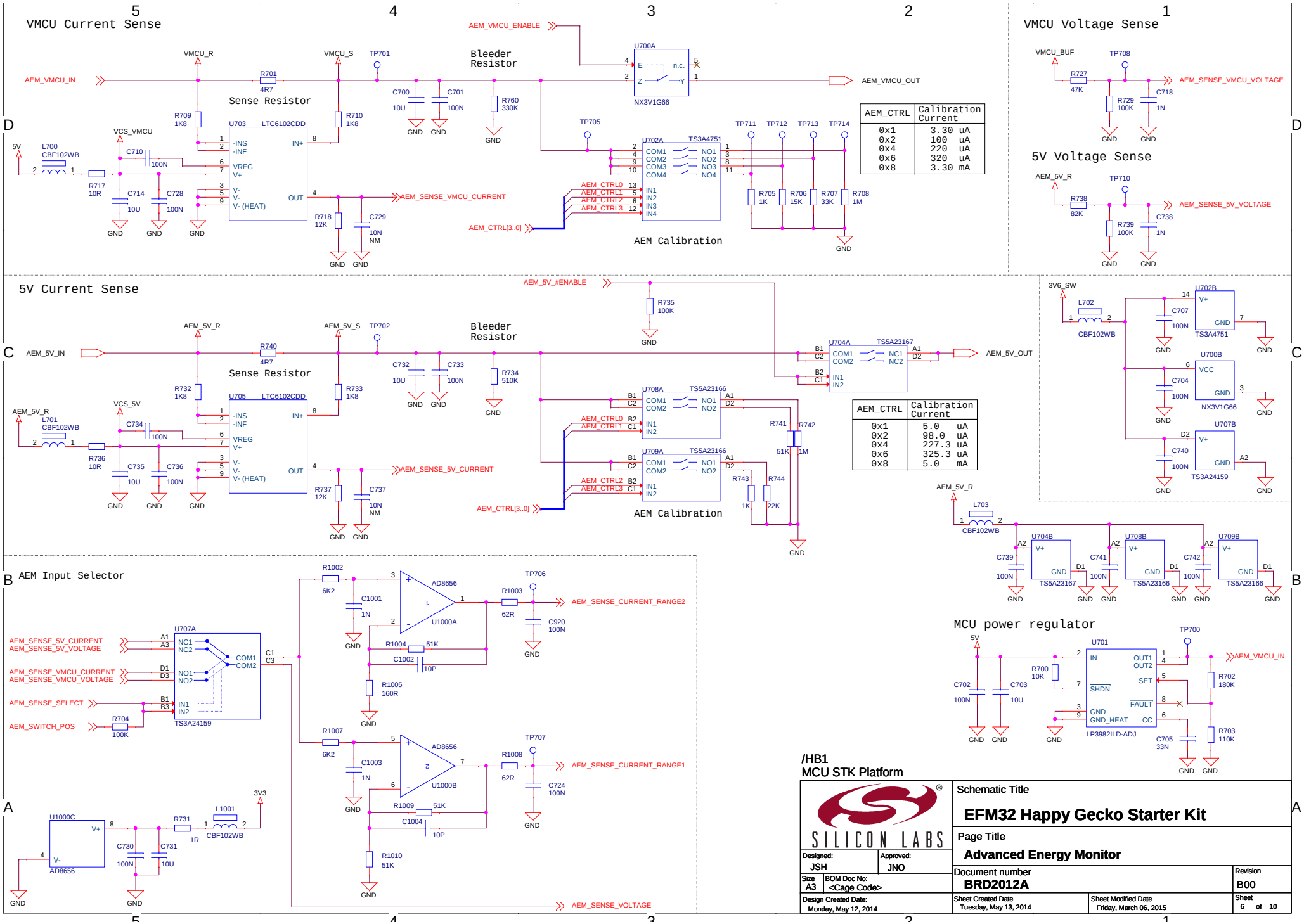

AEM_CTRL	Calibration Current
0x1	3.30 uA
0x2	100 uA
0x4	220 uA
0x6	320 uA
0x8	3.30 mA

AEM_CTRL	Calibration Current
0x1	5.0 uA
0x2	98.0 uA
0x4	227.3 uA
0x6	325.3 uA
0x8	5.0 mA

J-Link USB Port

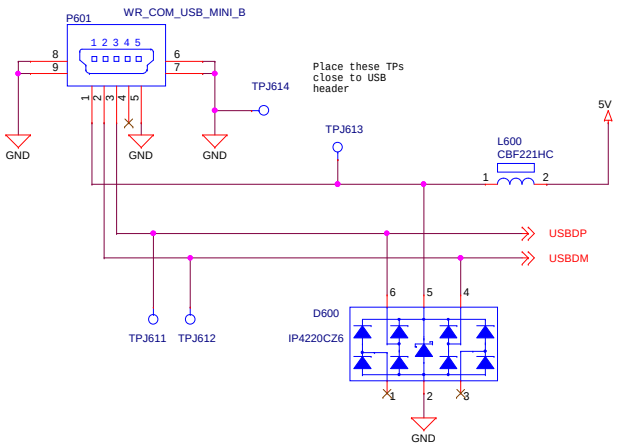

ADC reference voltage

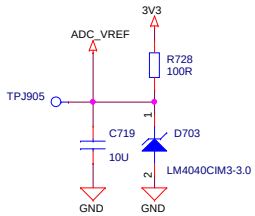

CTRLMCU EEPROM

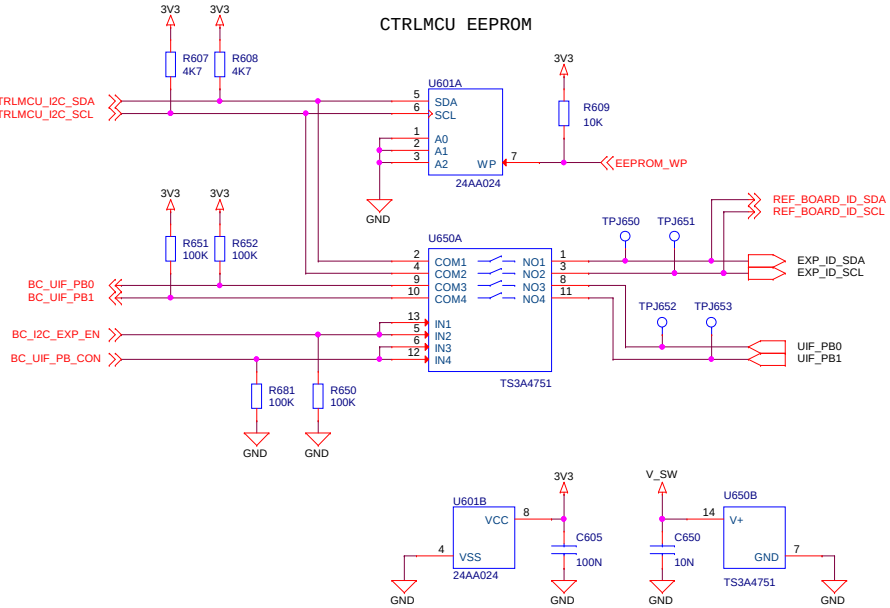

Indicators:

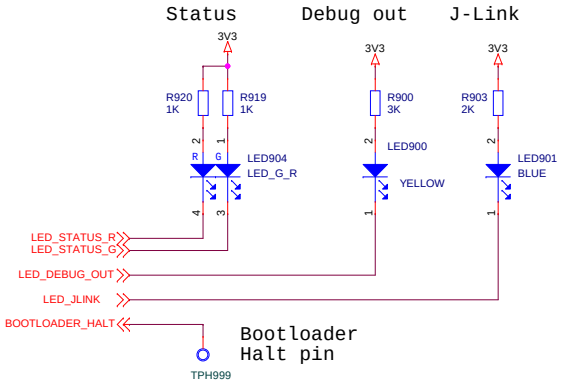

CTRLMCU SERIAL FLASH

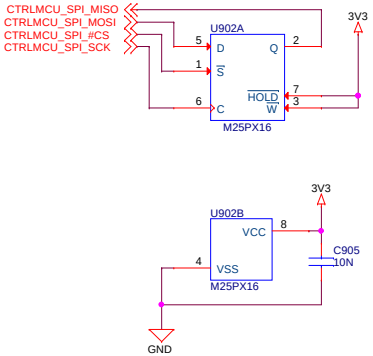

POWER SENSE

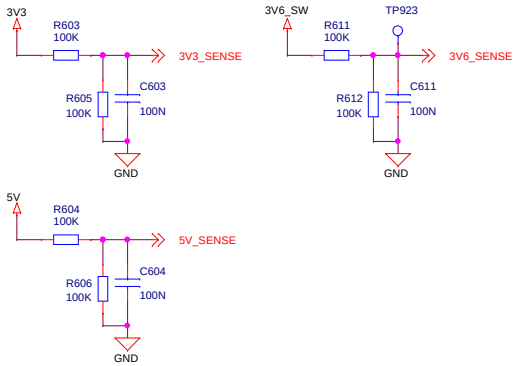

/HB1
MCU STK Platform

SILICON LABS	Schematic Title: **EFM32 Happy Gecko Starter Kit**	
	Page Title: **Board Controller Misc**	
Designed: JSH / Approved: JNO	Document number: **BRD2012A**	Revision: B00
Size: A3 / BOM Doc No: <Cage Code>		
Design Created Date: Monday, May 12, 2014	Sheet Created Date: Wednesday, May 14, 2014 / Sheet Modified Date: Friday, March 06, 2015	Sheet 7 of 10

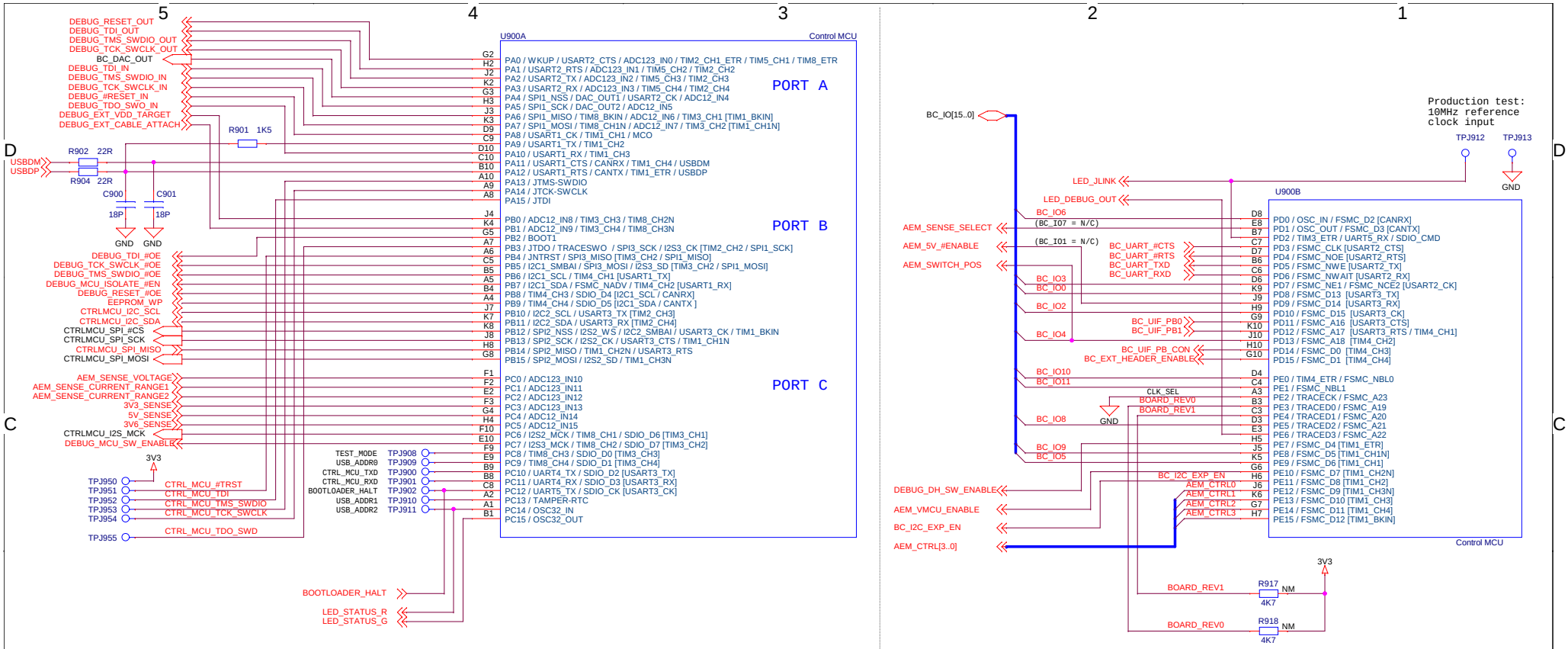

Control MCU Power & Bypass

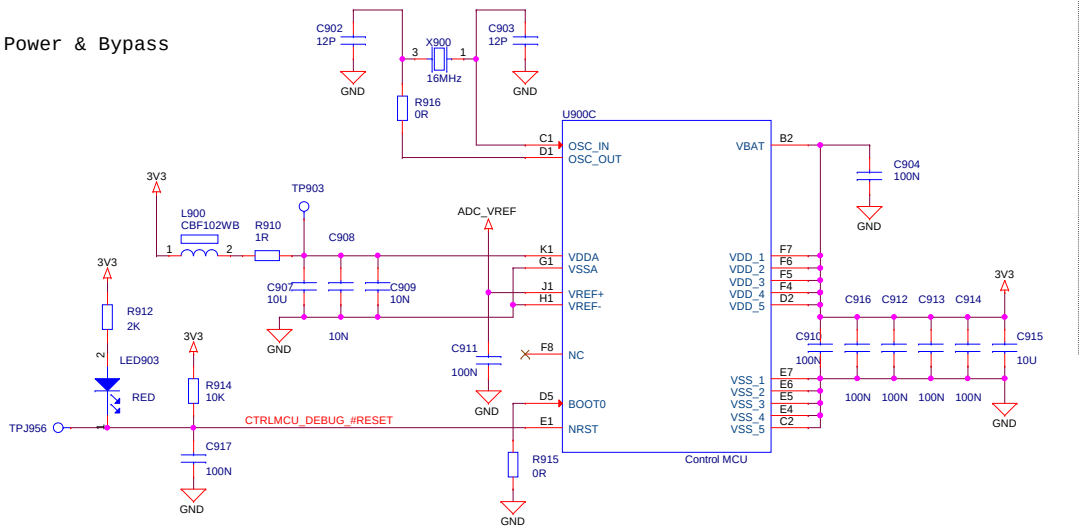

/HB1
MCU STK Platform

SILICON LABS	Schematic Title: **EFM32 Happy Gecko Starter Kit**		
	Page Title: **Control MCU**		
Designed: JSH	Approved: JNO	Document number: **BRD2012A**	Revision: B00
Size: A3	BOM Doc No: <Cage Code>		
Design Created Date: Monday, May 12, 2014	Sheet Created Date: Wednesday, May 14, 2014	Sheet Modified Date: Wednesday, February 25, 2015	Sheet 8 of 10

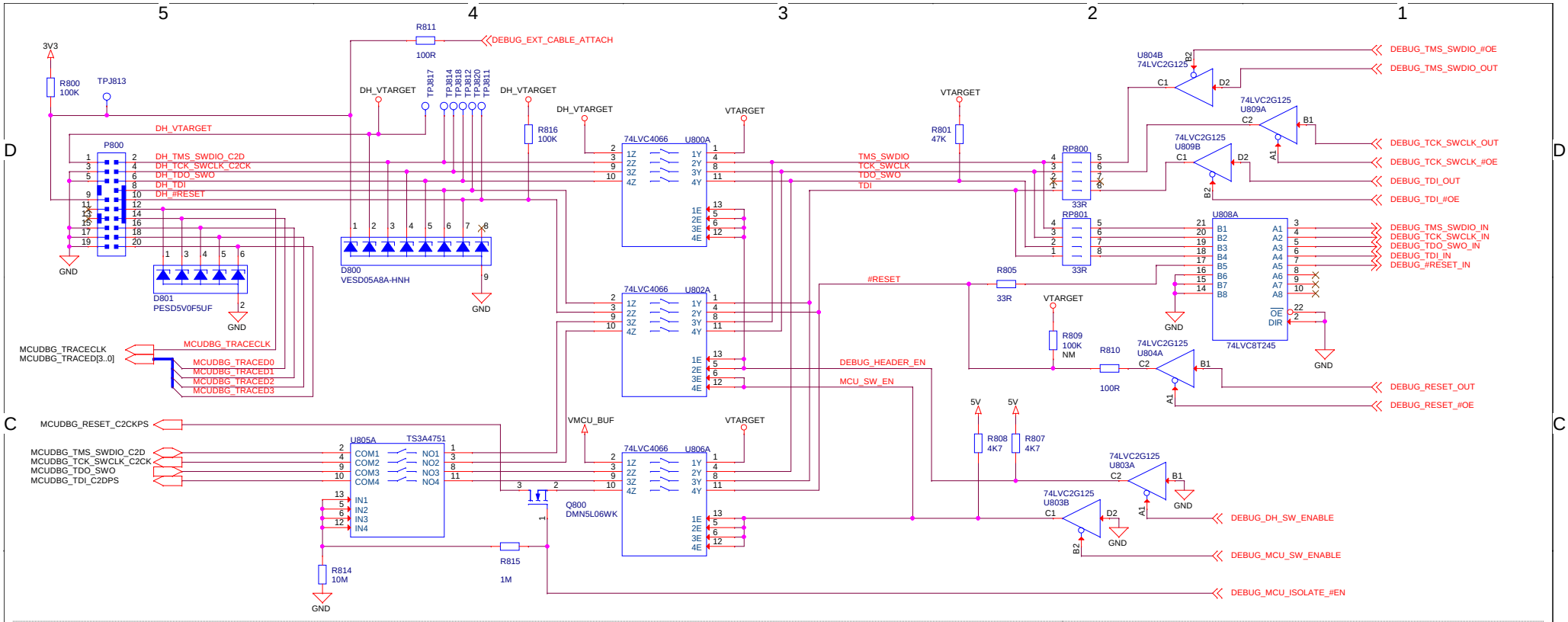

Power & Decoupling

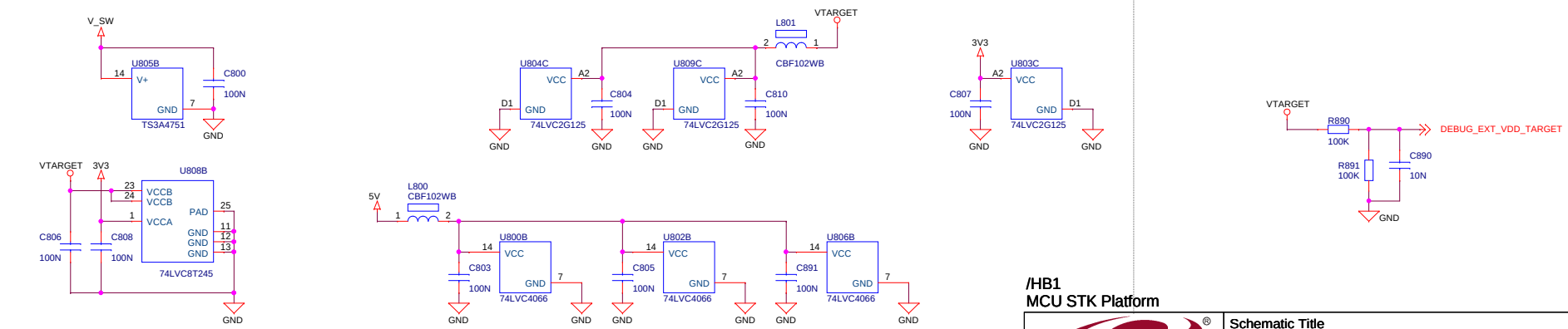

Mode	DEBUG_MCU_SW_ENABLE	DEBUG_DH_SW_ENABLE	DEBUG_BUF_#OE	ISOLATE_#EN	DH_VTARGET	VTARGET
Debug Out	0	1	0	0	External voltage	External voltage
MCU Debug	1	0	0	1	Disconnected	VMCU
Debug In	1	1	1	1	VMCU	VMCU
Debug Off	1	1	1	0	-	-

/HB1
MCU STK Platform

SILICON LABS

Schematic Title
EFM32 Happy Gecko Starter Kit

Page Title
Debug Interface

Designed:	Approved:	Document number	Revision
JSH	JNO	BRD2012A	B00
Size: A3	BOM Doc No: <Cage Code>		
Design Created Date: Monday, May 12, 2014		Sheet Created Date: Monday, May 12, 2014	Sheet Modified Date: Friday, March 06, 2015

Sheet 9 of 10

Virtual COM Port Interface

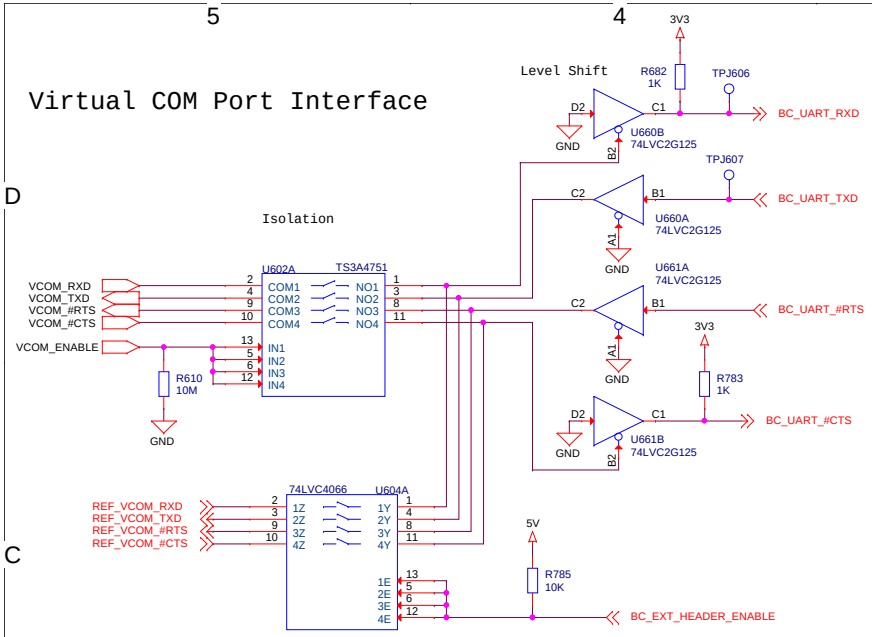

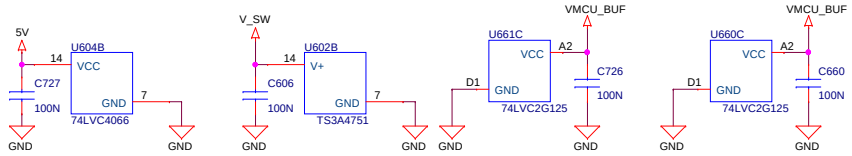

Connector for external reference designs boards

EXTERNAL BOARD

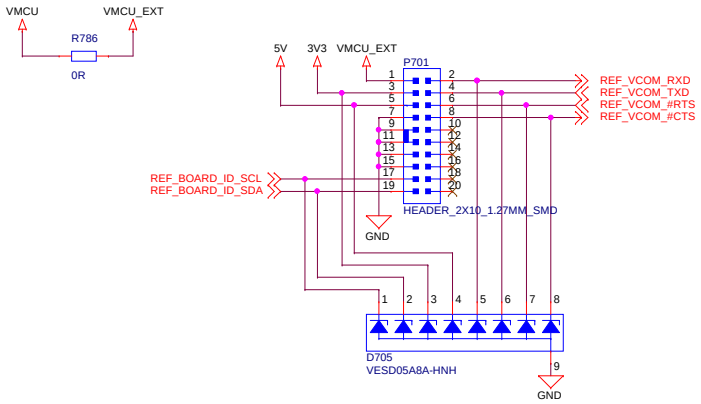

3V3 Regulator

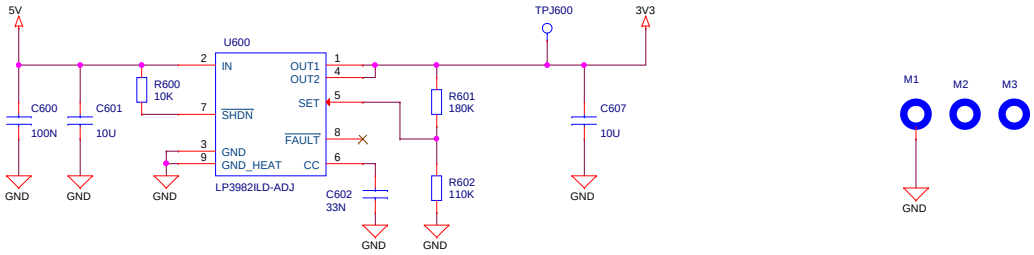

VMCU Voltage Mirror

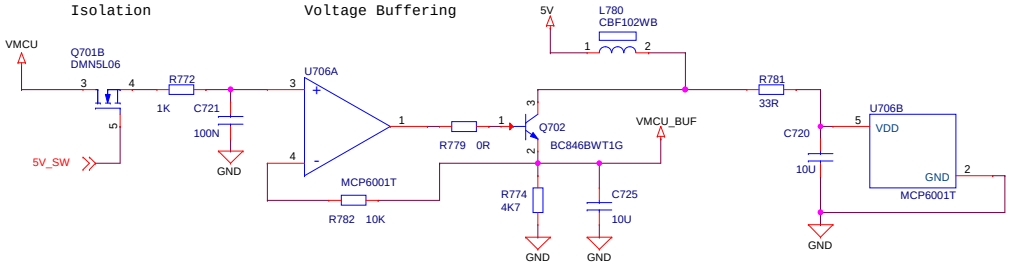

Power Supply for Analog Switches

The USB VBUS voltage is used to bias these transistors, turning the P-Channel MOSFETs (Q700) off, and the N-Channel MOSFETs (Q701) on.

J-Link USB Cable	PMOS State	NMOS State	V_SW	VMCU_SENSE
Connected	Off	ON	3.6V	VMCU
Disconnected	ON	OFF	VMCU	Isolated

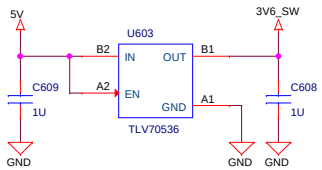

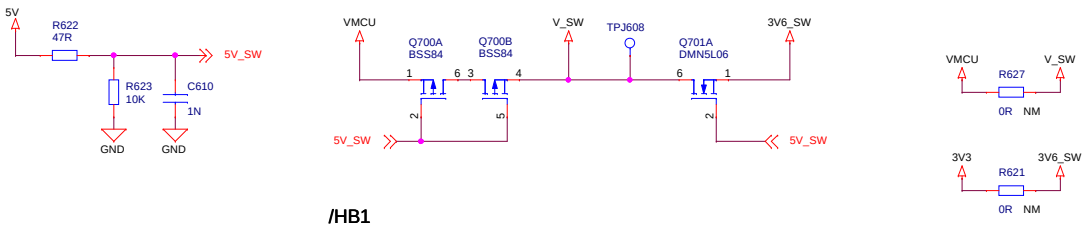

/HB1
MCU STK Platform

SILICON LABS	Schematic Title: **EFM32 Happy Gecko Starter Kit**
	Page Title: **Power & Misc**
Designed: JSH	Approved: JNO
Size: A3	BOM Doc No: <Cage Code>
Document number: **BRD2012A**	Revision: B00
Design Created Date: Monday, May 12, 2014	Sheet Created Date: Monday, May 12, 2014
Sheet Modified Date: Friday, January 23, 2015	Sheet 10 of 10