EFM32 Giant Gecko 11 STK

Board Function	Page
Title Page	1
User Interface	2
EFM32 Signal Assignments	3
EFM32 Power & USB	4
EFM32 I/O	5
Advanced Energy Monitor Sense	6
Advanced Energy Monitor Gain	7
Debug Interface	8
Power & Misc	9
Board Controller MCU	10
Board Controller Misc	11

Revision History

Rev.	Description
A00	First production release.
B00	Updated Board Controller pin-out.
B01	Minor update to secondary (target USB) AEM channel.
B02	Updated EFM32HG chip revision.
B03	Changed D801 to not mount.
C00	Updated EFM32HG chip revision + minor updates to debugger

LEGAL NOTICE:
SILICON LABORATORIES INC. ("SILICON LABS") AND/OR ITS LICENSORS DO NOT WARRANT THE ACCURACY OR COMPLETENESS OF THIS SCHEMATIC OR ANY INFORMATION CONTAINED WITHIN THIS SCHEMATIC. IT IS PROVIDED "AS-IS" FOR REFERENCE ONLY. SILICON LABS DOES NOT WARRANT THAT THIS DESIGN WILL MEET THE SPECIFICATIONS, BE SUITABLE FOR YOUR APPLICATION OR FIT FOR ANY PARTICULAR PURPOSE, OR WILL OPERATE IN YOUR IMPLEMENTATION. SILICON LABS AND ITS LICENSORS DO NOT WARRANT THAT THE DESIGN IMPLIED IN THIS SCHEMATIC IS PRODUCTION-WORTHY. YOU SHOULD COMPLETELY VALIDATE AND TEST YOUR DESIGN IMPLEMENTATION TO CONFIRM SYSTEM FUNCTIONALITY FOR YOUR APPLICATION.

PCB1

PCB2012A

/
EFM32 HG STK

Schematic Title	EFM32HG Happy Gecko STK
Page Title	Title Page
Designed: HEL	Approved: JNO
Size: A3	BOM Doc No: <Cage Code>
Document number	BRD2012A
Revision	C00
Design Created Date:	Wednesday, December 03, 2008
Sheet Created Date	Saturday, March 21, 2009
Sheet Modified Date	Monday, June 17, 2019
Sheet	1 of 11

COPYRIGHT SILICON LABORATORIES INC. 2020 CONFIDENTIAL - SUBJECT TO TERMS OF USE

User LEDs

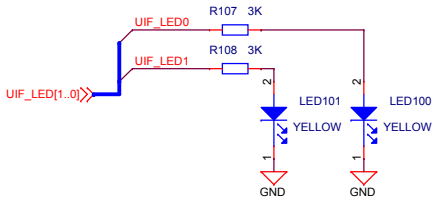

Touch Pads

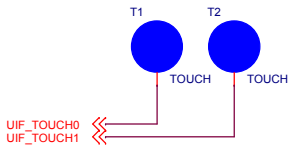

EXP Header

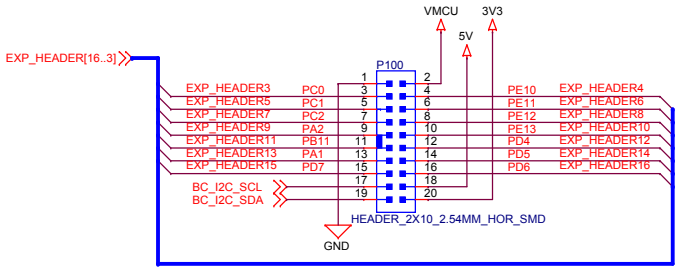

EXP-Header Functionality

1	GND		
3	PC0		ACMP0_CH0
5	PC1		ACMP0_CH1
7	PC2		ACMP0_CH2
9	PA2		
11	PB11		IDAC0_OUT
13	PA1		
15	PD7	I2C0_SCL	ADC0_CH7
17	Reserved for EXP Board Identification		
19	Reserved for EXP Board Identification		

2	VMCU		
4	PE10	US0_TX	
6	PE11	US0_RX	
8	PE12	US0_CLK	ADC0_CH0
10	PE13	US0_CS	ADC0_CH1
12	PD4	LEU0_TX	ADC0_CH4
14	PD5	LEU0_RX	ADC0_CH5
16	PD6	I2C0_SDA	ADC0_CH6
18	5V		
20	3V3		

User Pushbuttons

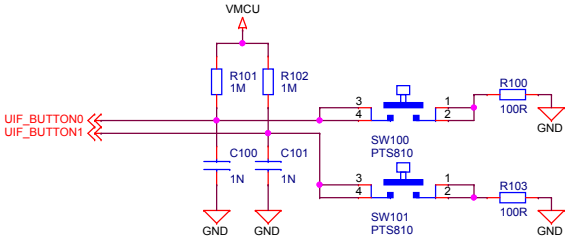

Memory LCD-TFT Display & Multiplexer

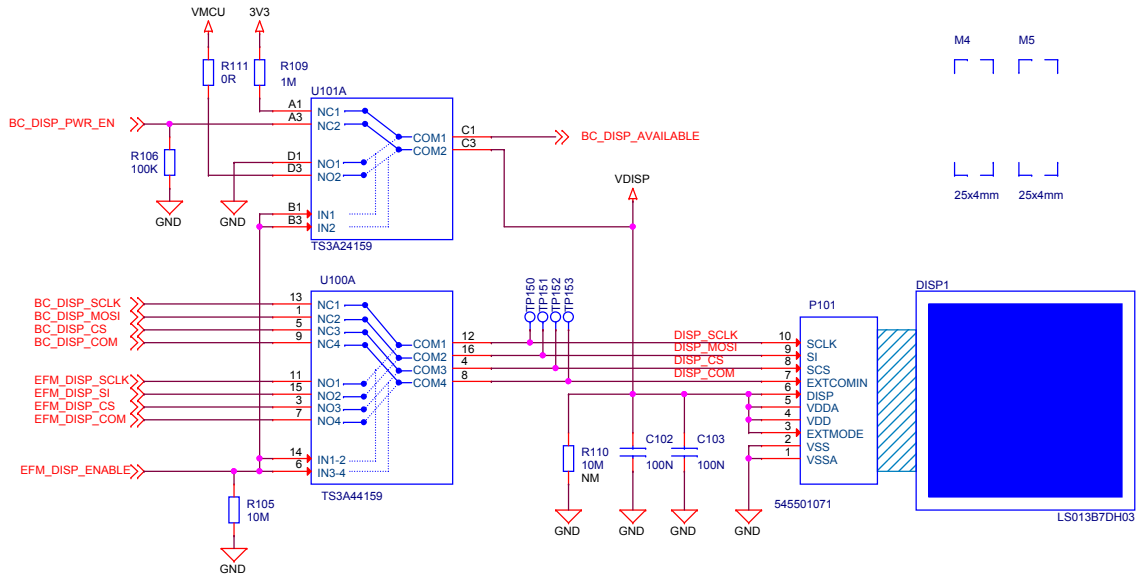

EFM_DISP_ENABLE	DISP_CTRL	VDISP	BC_DISP_AVAILABLE
1	EFM	VMCU	0
0	BC	BC_DISP_PWR_EN	1

The EFM32 always controls ownership of the display using the EFM_DISP_ENABLE signal.

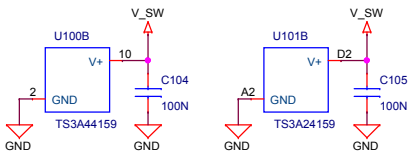

Relative Humidity & Temperature Sensor

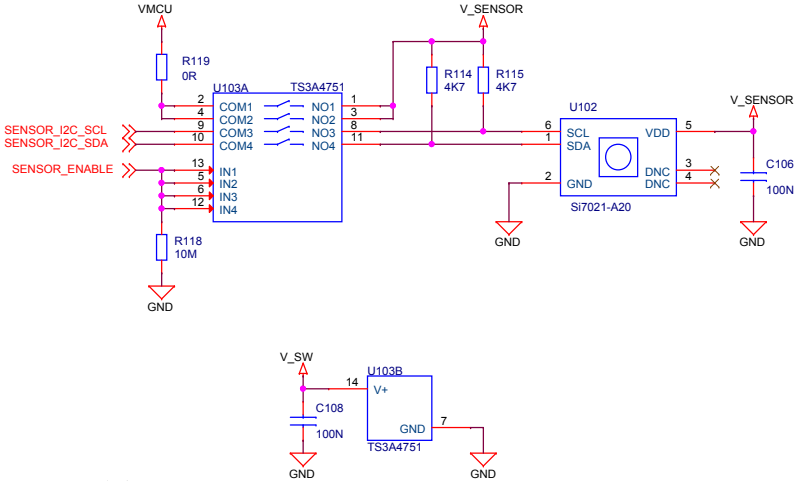

EFM32 HG STK

SILICON LABS	Schematic Title: EFM32HG Happy Gecko STK	
	Page Title: User Interfaces	
Designed: HEL / Approved: JNO	Document number: BRD2012A	Revision: C00
Size: A3 / BOM Doc No:		
Design Created Date: Wednesday, December 03, 2008	Sheet Created Date: Friday, October 31, 2014	Sheet Modified Date: Monday, June 17, 2019
		Sheet 2 of 11

COPYRIGHT SILICON LABORATORIES INC. 2020 CONFIDENTIAL - SUBJECT TO TERMS OF USE

Breakout Connections

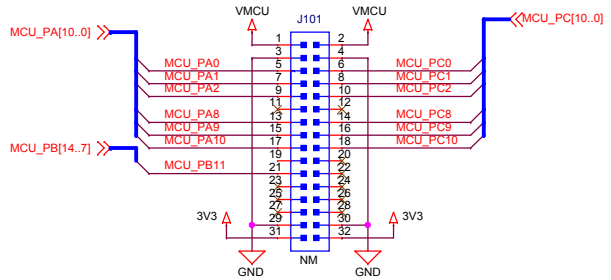

Breakout header labels:

VMCU	VMCU
GND	GND
PA0	PC0
PA1	PC1
PA2	PC2
NC	NC
PA8	PC8
PA9	PC9
PA10	PC10
NC	NC
PB11	NC
NC	NC
NC	NC
NC	NC
NC	NC
GND	GND
3V3	3V3

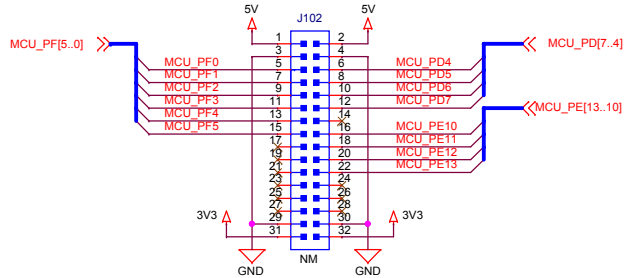

5V	5V
GND	GND
PF0	PD4
PF1	PD5
PF2	PD6
PF3	PD7
PF4	NC
PF5	PE10
NC	PE11
NC	PE12
NC	PE13
NC	NC
NC	NC
NC	NC
NC	NC
GND	GND
3V3	3V3

PA Connections

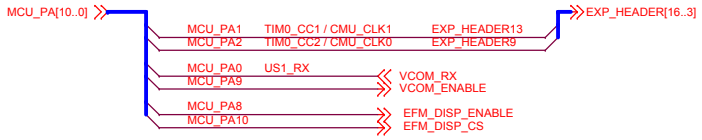

PB Connections

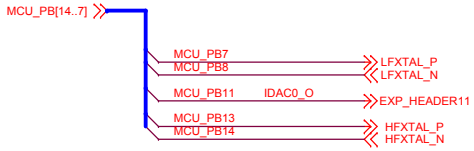

PE Connections

PE10 - PE13 (USART1) are used for the EXP Header
SPI port as well as the display clock and data.

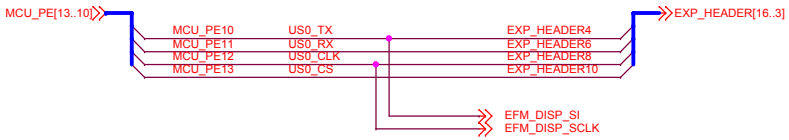

PC Connections

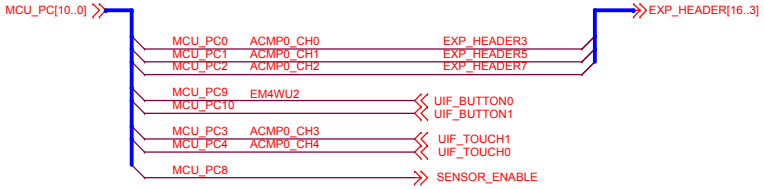

PF Connections

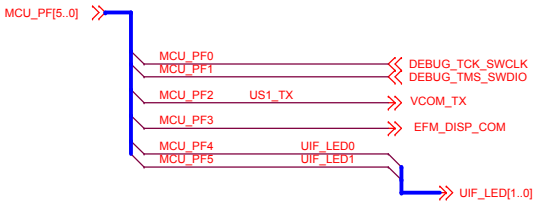

PD Connections

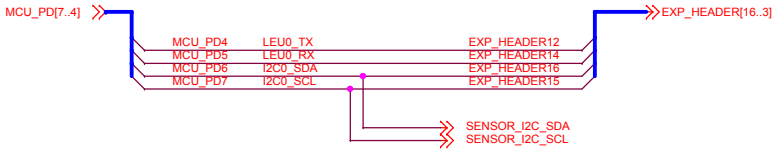

SILICON LABS	Schematic Title: EFM32HG Happy Gecko STK		
	Page Title: EFM32 Signal Assignments		
Designed: HEL / Approved: JNO	Document number: BRD2012A		Revision: C00
Size: A3 / BOM Doc No: <Cage Code>			
Design Created Date: Wednesday, December 03, 2008	Sheet Created Date: Friday, October 31, 2014	Sheet Modified Date: Monday, June 17, 2019	Sheet 3 of 11

COPYRIGHT SILICON LABORATORIES INC. 2020 CONFIDENTIAL - SUBJECT TO TERMS OF USE

Power Select Switch: AEM/USB/BAT

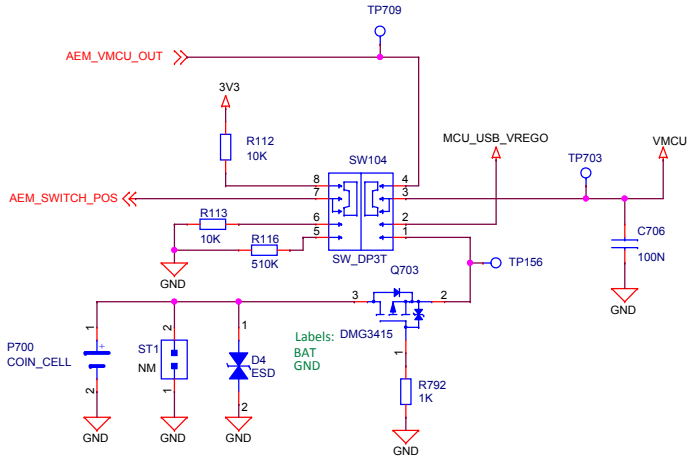

SWITCH POS	MODE DESCRIPTION
AEM	AEM Enabled, VMCU sourced from external 3.3V LDO powered by BC USB 5V supply
USB	AEM Enabled. VMCU sourced from internal 3.3V LDO powered by MCU USB 5V supply
BAT	AEM Disabled, VMCU sourced from coin-cell battery or external power supply

EFM32 Power and Decoupling

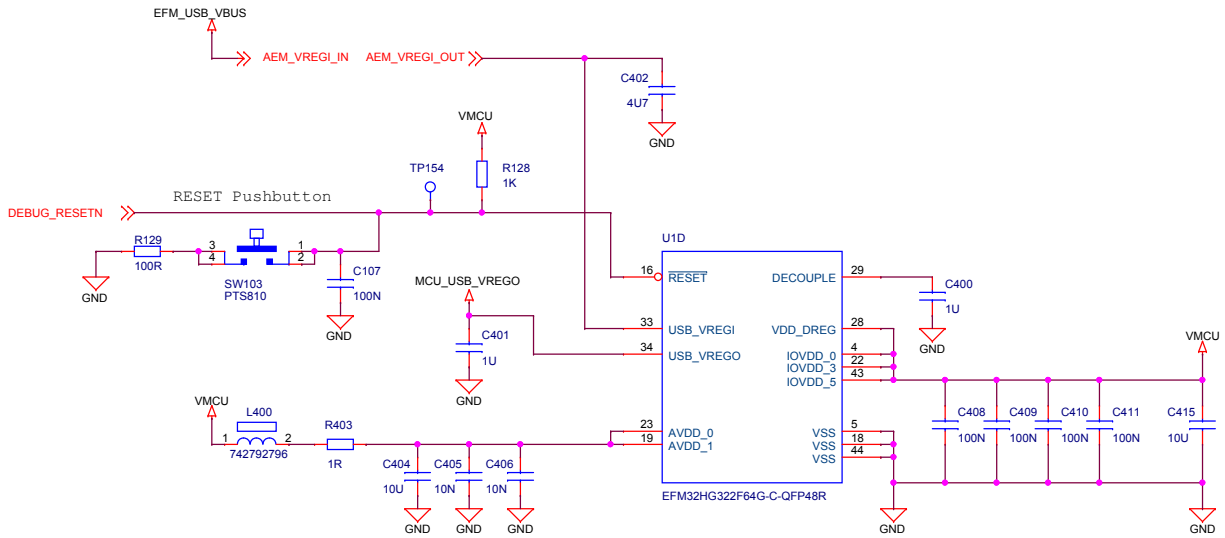

USB Connection and ESD protection

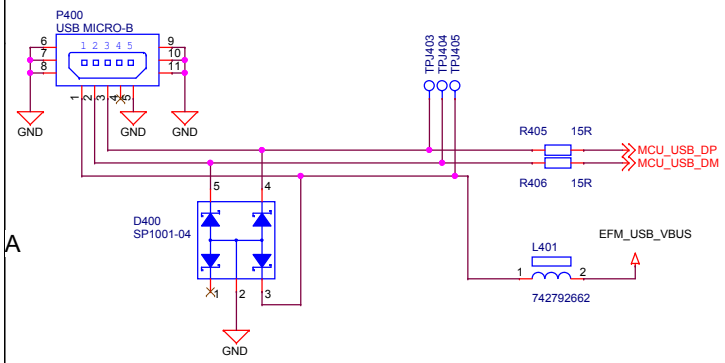

Schematic Title	EFM32HG Happy Gecko STK
Page Title	EFM32 Power
Designed: HEL	Approved: JNO
Size A3	BOM Doc No: <Cage Code>
Document number	BRD2012A
Revision	C00
Design Created Date: Wednesday, December 03, 2008	Sheet Created Date: Friday, October 31, 2014
Sheet Modified Date: Monday, June 17, 2019	Sheet 4 of 11

COPYRIGHT SILICON LABORATORIES INC. 2020 CONFIDENTIAL - SUBJECT TO TERMS OF USE

EFM32 HG MCU

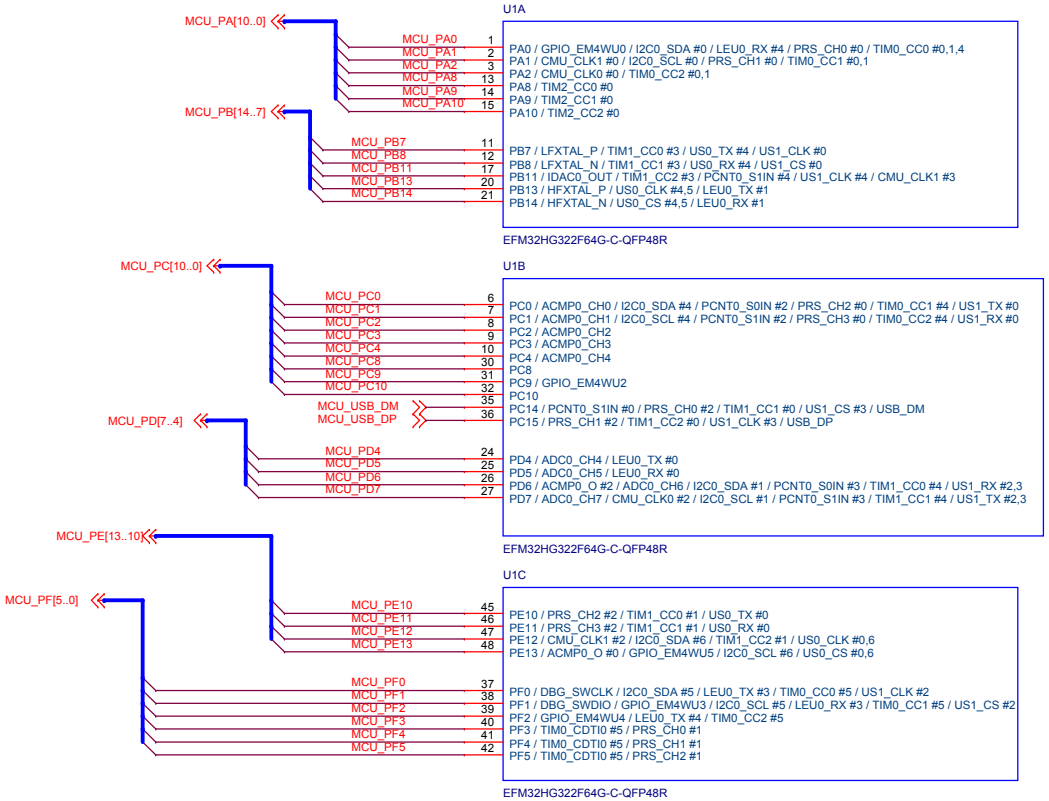

High Frequency Clock

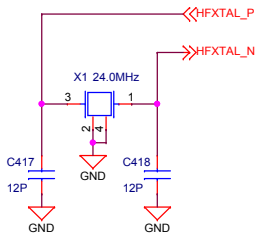

Low Frequency Clock

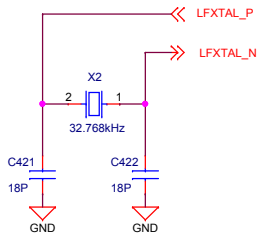

SILICON LABS	Schematic Title: EFM32HG Happy Gecko STK	
Designed: HEL / Approved: JNO	Page Title: EFM32 I/O	
Size: A3 / BOM Doc No: <Cage Code>	Document number: BRD2012A	Revision: C00
Design Created Date: Wednesday, December 03, 2008	Sheet Created Date: Monday, November 17, 2014 / Sheet Modified Date: Monday, June 17, 2019	Sheet 5 of 11

COPYRIGHT SILICON LABORATORIES INC. 2020 CONFIDENTIAL - SUBJECT TO TERMS OF USE

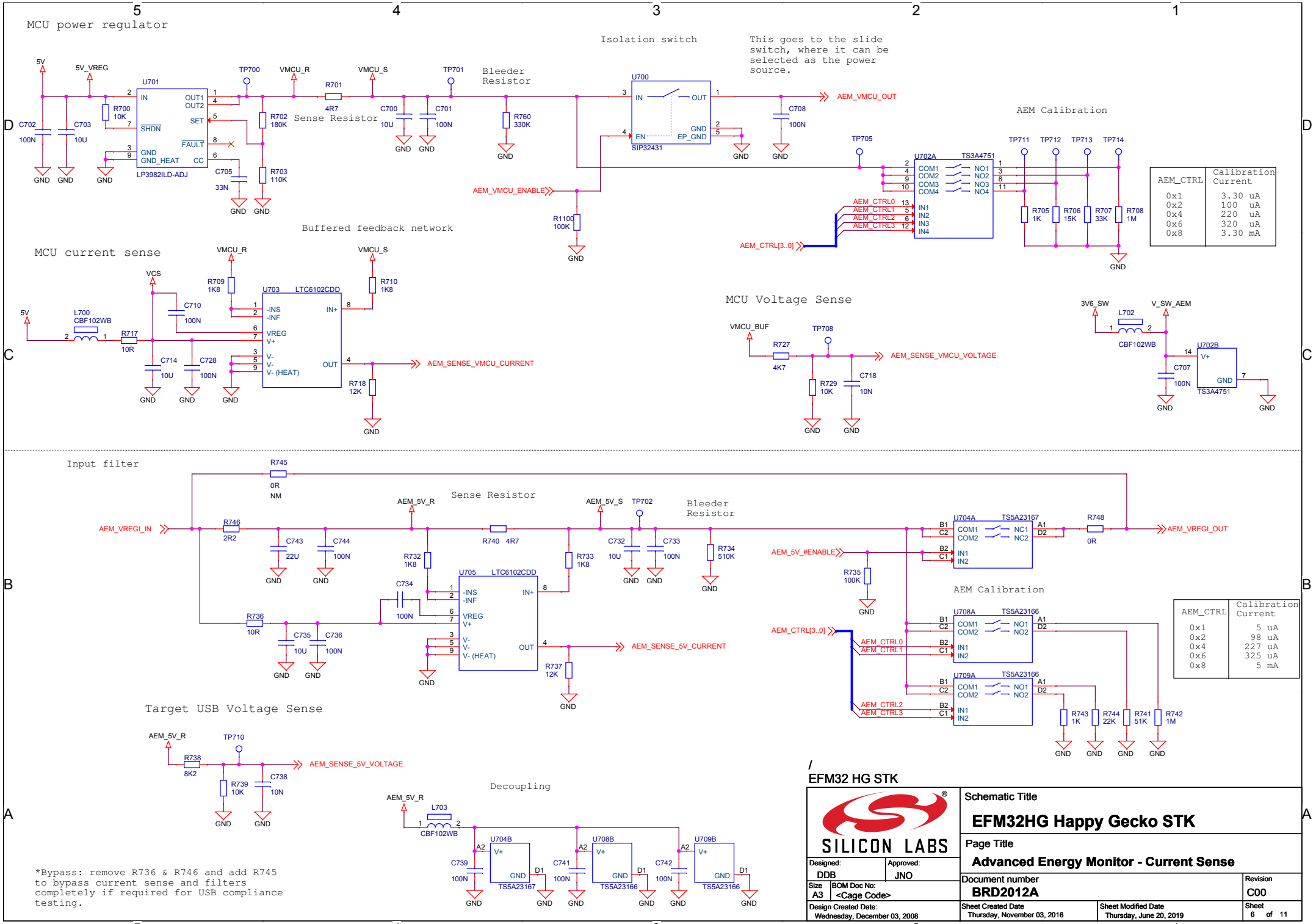

COPYRIGHT SILICON LABORATORIES INC. 2020 CONFIDENTIAL - SUBJECT TO TERMS OF USE

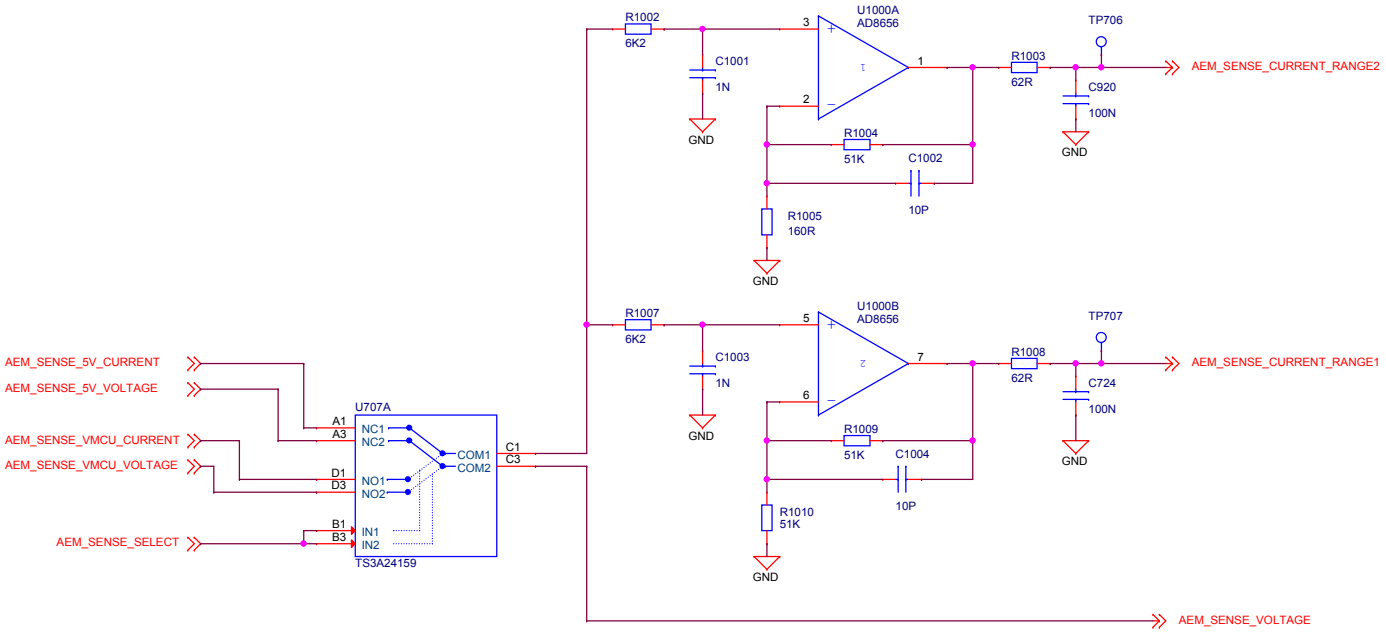

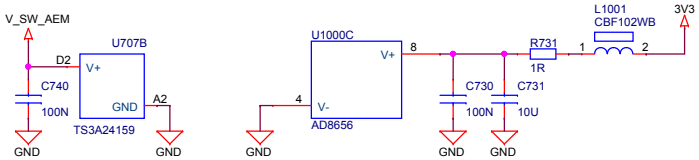

/
EFM32 HG STK

SILICON LABS

Schematic Title	EFM32HG Happy Gecko STK
Page Title	Advanced Energy Monitor - Gain Stages
Designed: DDB	Approved: JNO
Size A3	BOM Doc No: <Cage Code>
Document number	BRD2012A
Revision	C00
Design Created Date:	Wednesday, December 03, 2008
Sheet Created Date	Thursday, November 03, 2016
Sheet Modified Date	Monday, June 17, 2019
Sheet	7 of 11

COPYRIGHT SILICON LABORATORIES INC. 2020 CONFIDENTIAL - SUBJECT TO TERMS OF USE

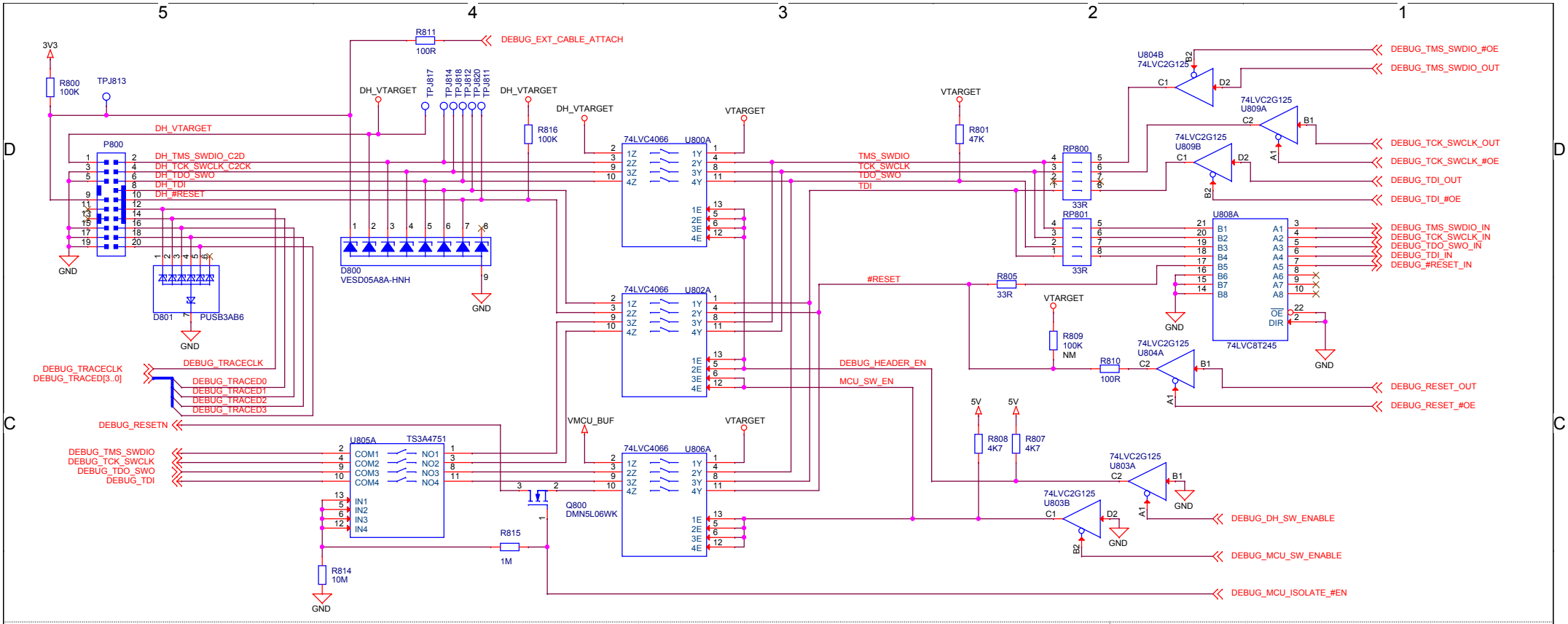

Power & Decoupling

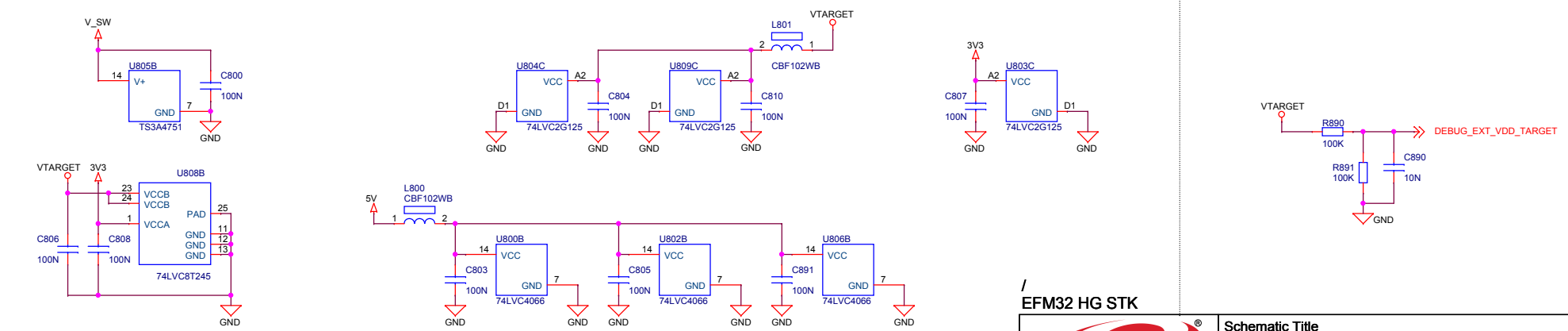

Mode	DEBUG_MCU_SW_ENABLE	DEBUG_DH_SW_ENABLE	DEBUG_BUF_#OE	ISOLATE_#EN	DH_VTARGET	VTARGET
Debug Out	0	1	0	0	External voltage	External voltage
MCU Debug	1	0	0	1	Disconnected	VMCU
Debug In	1	1	1	1	VMCU	VMCU
Debug Off	1	1	1	0	-	-

/
EFM32 HG STK

SILICON LABS

Designed: DDB	Approved: JNO	
Size A3	BOM Doc No: <Cage Code>	
Design Created Date: Wednesday, December 03, 2008		

Schematic Title
EFM32HG Happy Gecko STK

Page Title
Debug Interface

Document number	Revision
BRD2012A	C00

Sheet Created Date	Sheet Modified Date	Sheet
Thursday, November 03, 2016	Monday, June 17, 2019	8 of 11

COPYRIGHT SILICON LABORATORIES INC. 2020 CONFIDENTIAL - SUBJECT TO TERMS OF USE

Virtual COM Port Interface

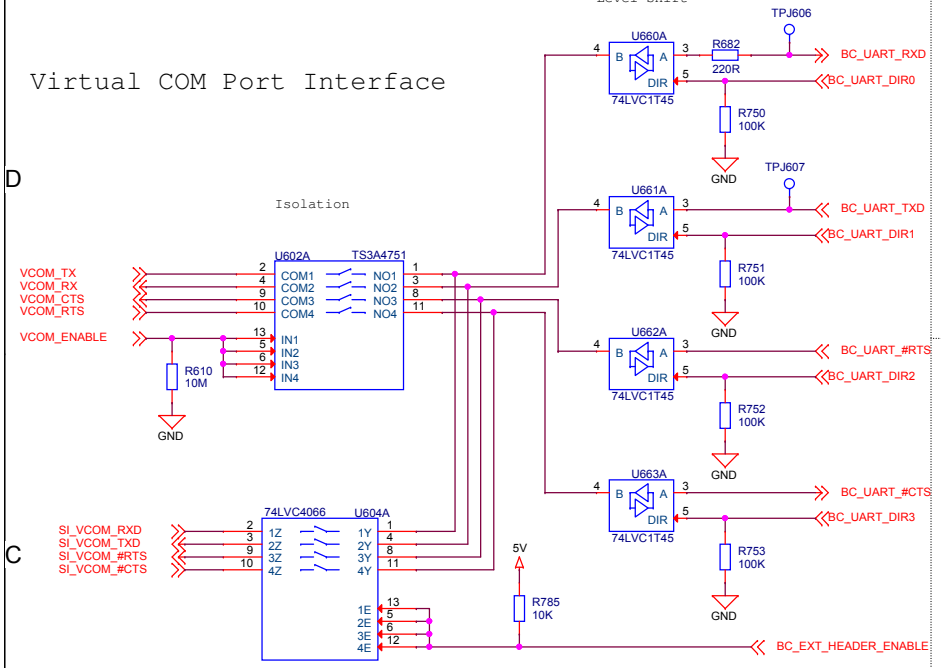

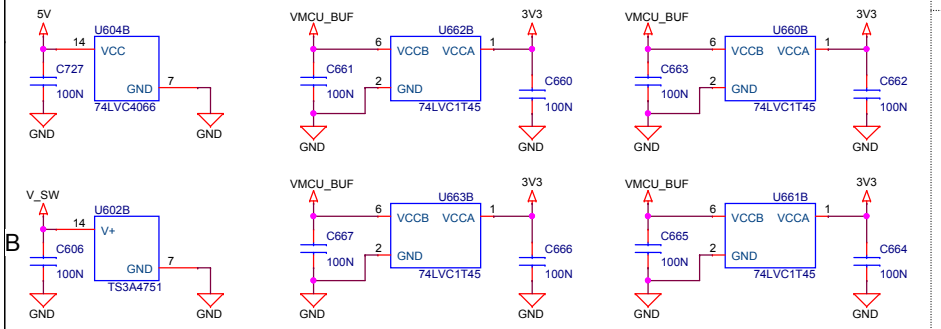

3V3 Regulator

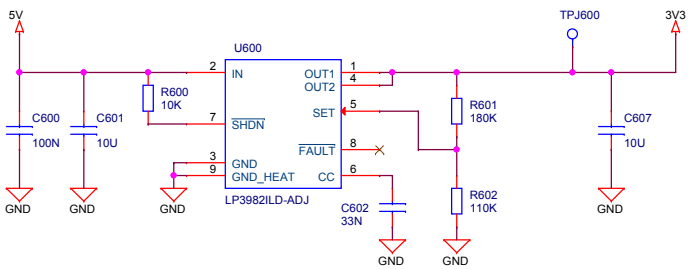

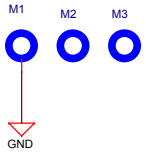

VMCU Voltage Mirror

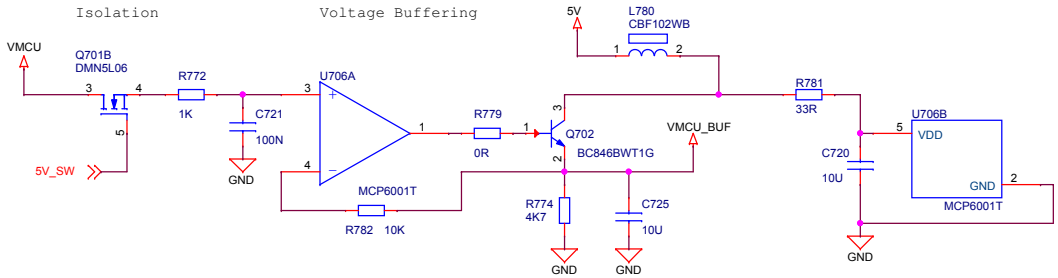

Power Supply for Analog Switches

The USB VBUS voltage is used to bias these transistors, turning the P-Channel MOSFETs (Q700) off, and the N-Channel MOSFETs (Q701) on.

J-Link USB Cable	PMOS State	NMOS State	V_SW	VMCU_SENSE
Connected	Off	ON	3.6V	VMCU
Disconnected	ON	OFF	VMCU	Isolated

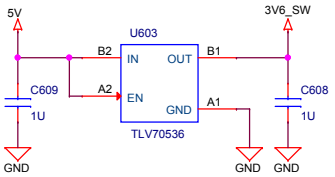

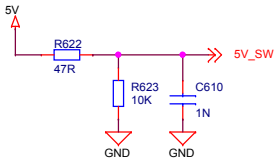

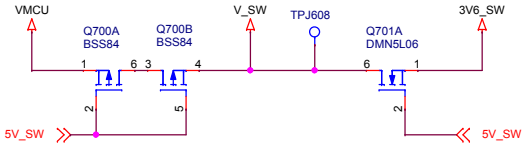

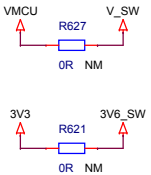

EXTERNAL BOARD

Connector for external reference designs boards

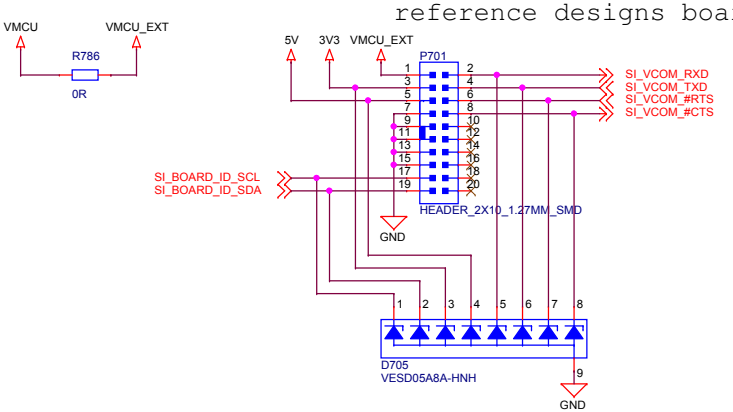

/
EFM32 HG STK

SILICON LABS	Schematic Title: **EFM32HG Happy Gecko STK**	
	Page Title: **Power & Misc**	
Designed: DDB / Approved: JNO	Document number: **BRD2012A**	Revision: C00
Size: A3 / BOM Doc No: <Cage Code>		
Design Created Date: Wednesday, December 03, 2008	Sheet Created Date: Thursday, November 03, 2016	Sheet Modified Date: Thursday, June 20, 2019
		Sheet 9 of 11

COPYRIGHT SILICON LABORATORIES INC. 2020 CONFIDENTIAL - SUBJECT TO TERMS OF USE

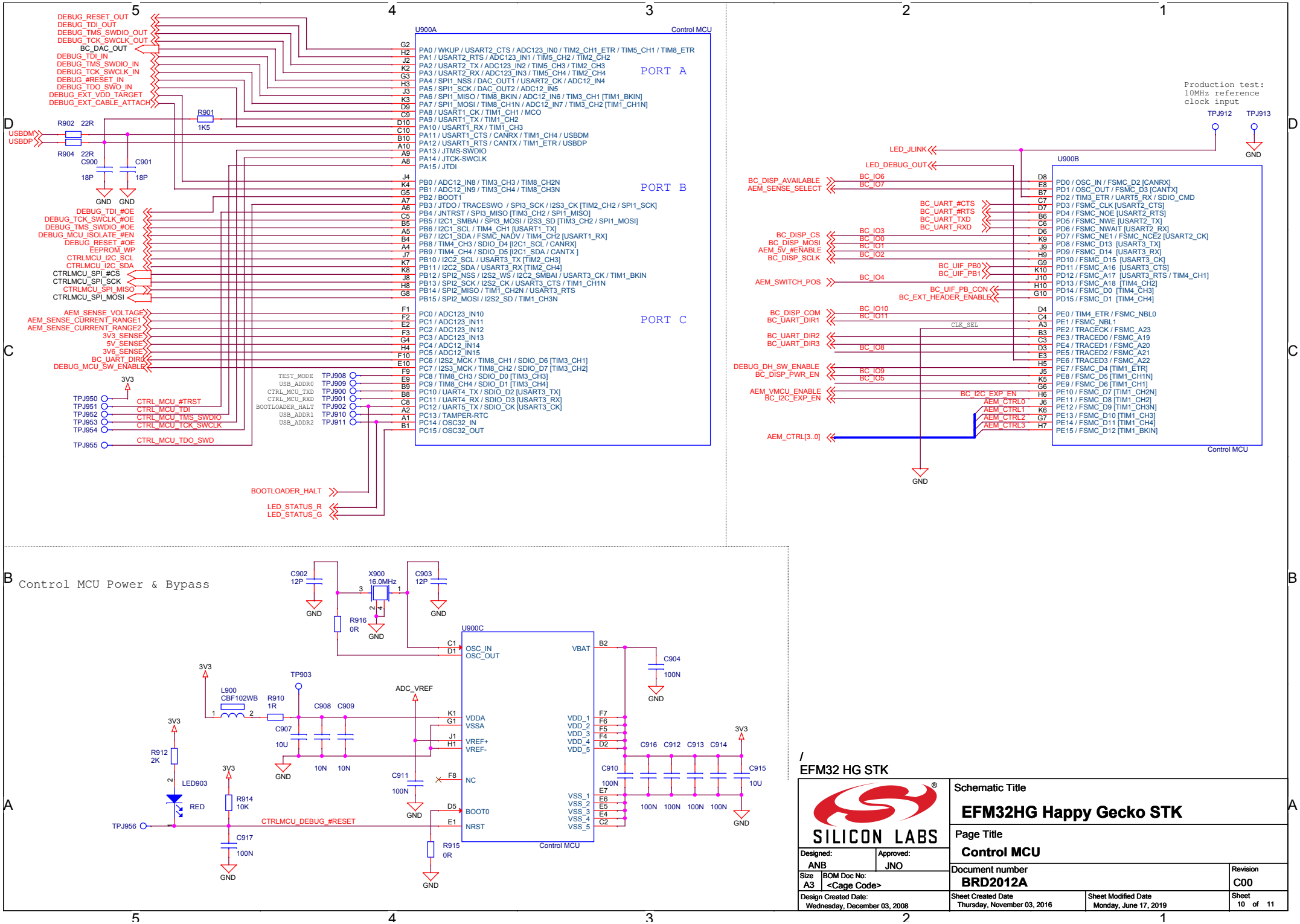

COPYRIGHT SILICON LABORATORIES INC. 2020 CONFIDENTIAL - SUBJECT TO TERMS OF USE

J-Link USB Port

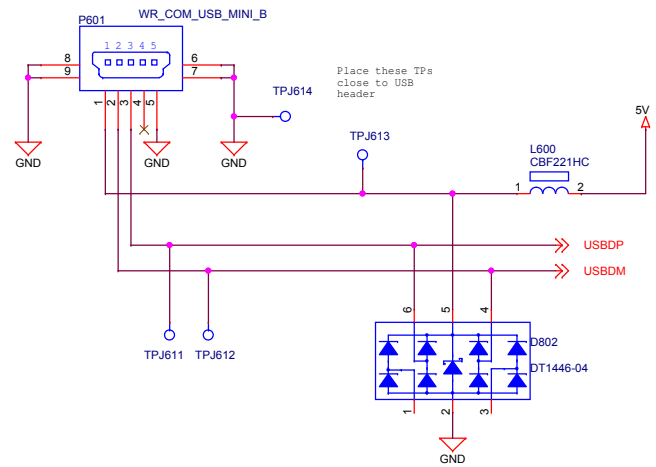

ADC reference voltage

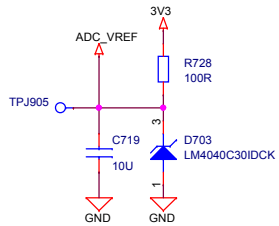

CTRLMCU EEPROM

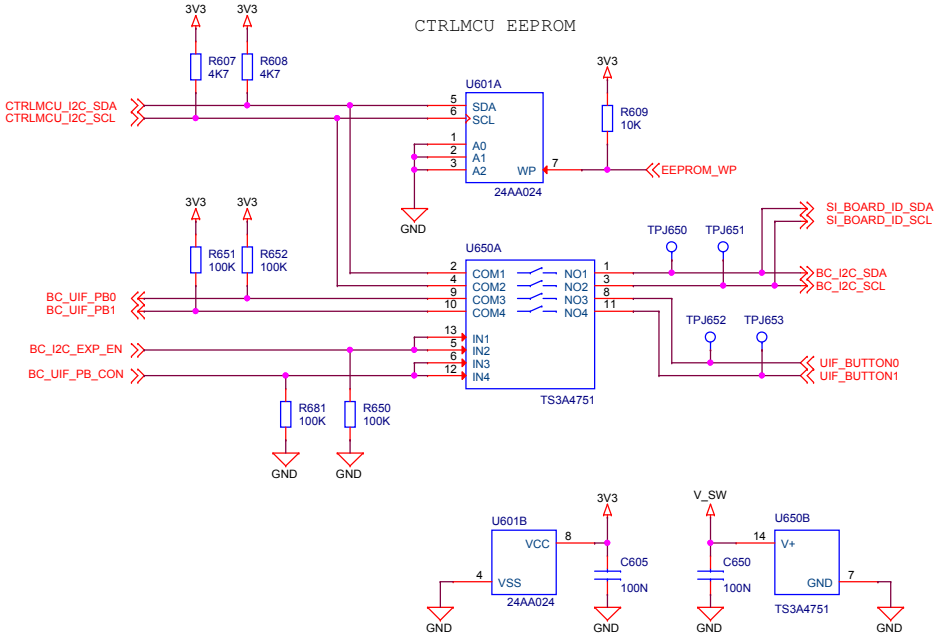

Indicators:

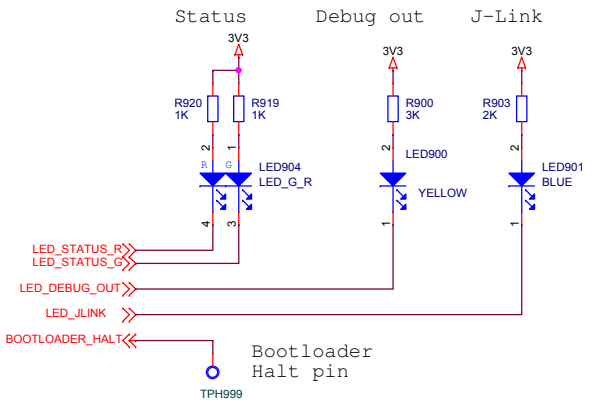

CTRLMCU SERIAL FLASH

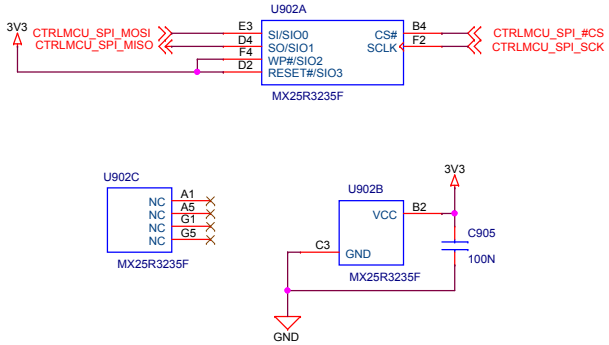

POWER SENSE

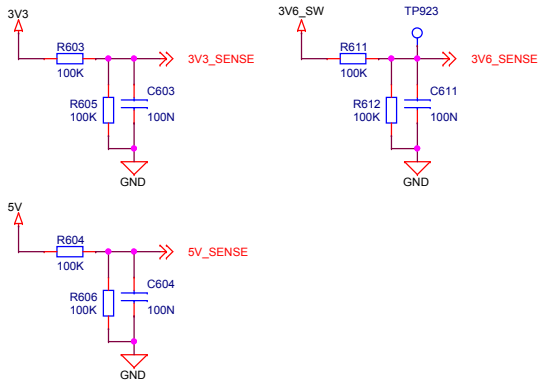

/
EFM32 HG STK

Schematic Title	EFM32HG Happy Gecko STK
Page Title	Board Controller Misc
Designed: ANB	Approved: JNO
Size A3	BOM Doc No: <Cage Code>
Document number	BRD2012A
Revision	C00
Design Created Date:	Wednesday, December 03, 2008
Sheet Created Date	Thursday, November 03, 2016
Sheet Modified Date	Monday, June 17, 2019
Sheet	11 of 11

COPYRIGHT SILICON LABORATORIES INC. 2020 CONFIDENTIAL - SUBJECT TO TERMS OF USE