EFM8UB1 Universal Bee STK

Board Function	Page
Title Page	1
User Interfaces	2
Signal Assignments	3
EFM8 I/O	4
STK Common Platform	5
Advanced Energy Monitor	6
Board Controller	7
Debug Interface	8
Power & Misc	9
Clock & Filter	10

Revision History

Rev.	Description
A00	Initial prototype version.
A01	Initial version released for series production.
A02	Changed ESD protection diode for the EFM8's USB.
A03	Updated PCB revision.

LEGAL NOTICE:
SILICON LABORATORIES INC. ("SILICON LABS") AND/OR ITS LICENSORS DO NOT WARRANT THE ACCURACY OR COMPLETENESS OF THIS SCHEMATIC OR ANY INFORMATION CONTAINED WITHIN THIS SCHEMATIC. IT IS PROVIDED "AS-IS" FOR REFERENCE ONLY. SILICON LABS DOES NOT WARRANT THAT THIS DESIGN WILL MEET THE SPECIFICATIONS, BE SUITABLE FOR YOUR APPLICATION OR FIT FOR ANY PARTICULAR PURPOSE, OR WILL OPERATE IN YOUR IMPLEMENTATION. SILICON LABS AND ITS LICENSORS DO NOT WARRANT THAT THE DESIGN IMPLIED IN THIS SCHEMATIC IS PRODUCTION-WORTHY. YOU SHOULD COMPLETELY VALIDATE AND TEST YOUR DESIGN IMPLEMENTATION TO CONFIRM SYSTEM FUNCTIONALITY FOR YOUR APPLICATION.

PCB1

PCB5000

STK

Schematic Title: EFM8UB1 Universal Bee Starter Kit		
Page Title: Title Page		
Designed: MRW	Approved: JNO	
Size: A3	BOM Doc No:	
Document number: BRD5000A		Revision: A04
Design Created Date: Wednesday, December 03, 2008	Sheet Created Date: Thursday, May 15, 2014	Sheet Modified Date: Monday, March 23, 2015
		Sheet 1 of 10

COPYRIGHT SILICON LABORATORIES INC. 2020 CONFIDENTIAL - SUBJECT TO TERMS OF USE

Virtual COM Port Interface

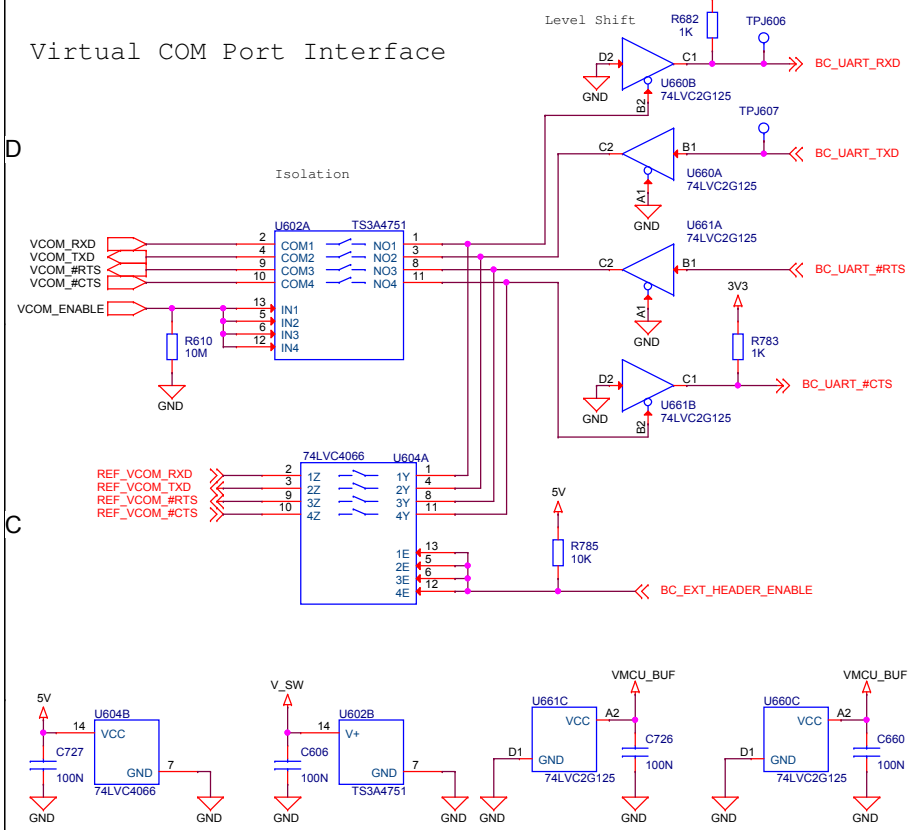

3V3 Regulator

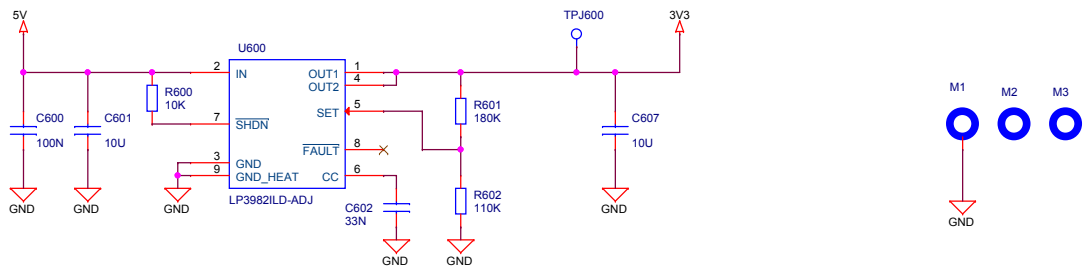

VMCU Voltage Mirror

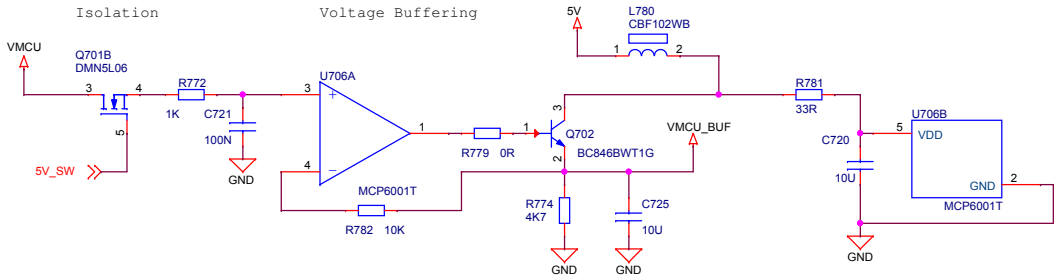

Power Supply for Analog Switches

The USB VBUS voltage is used to bias these transistors, turning the P-Channel MOSFETs (Q700) off, and the N-Channel MOSFETs (Q701) on.

J-Link USB Cable	PMOS State	NMOS State	V_SW	VMCU_SENSE
Connected	Off	ON	3.6V	VMCU
Disconnected	ON	OFF	VMCU	Isolated

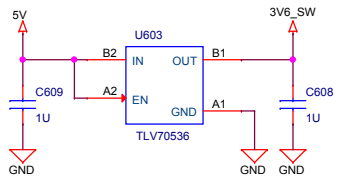

Connector for external reference designs boards

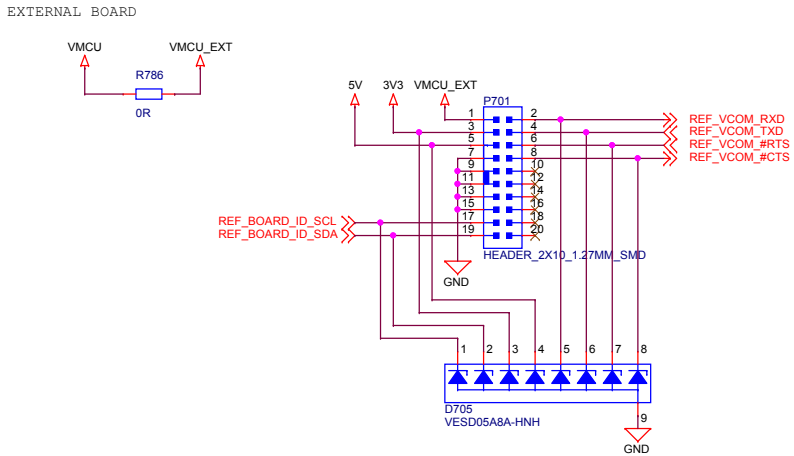

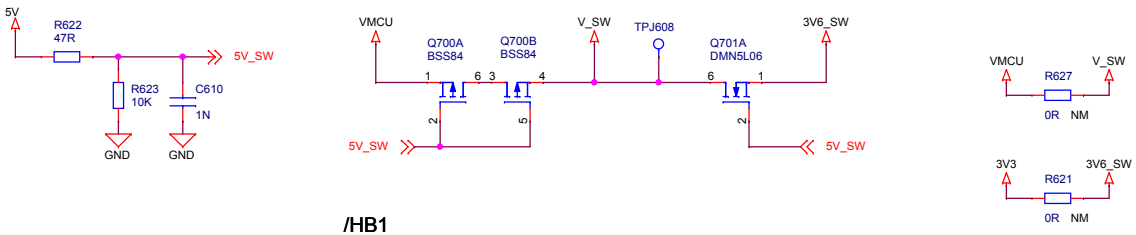

/HB1
MCU STK Platform

SILICON LABS	Schematic Title: **MCU Starter Kit Platform**	
	Page Title: **Power & Misc**	
Designed: DDB / Approved: JNO	Document number: <Doc>	Revision: <RevCode>
Size: A3 / BOM Doc No: <Cage Code>		
Design Created Date: Monday, May 12, 2014	Sheet Created Date: Monday, May 12, 2014	Sheet Modified Date: Tuesday, September 16, 2014
		Sheet 1 of 1

COPYRIGHT SILICON LABORATORIES INC. 2020 CONFIDENTIAL - SUBJECT TO TERMS OF USE

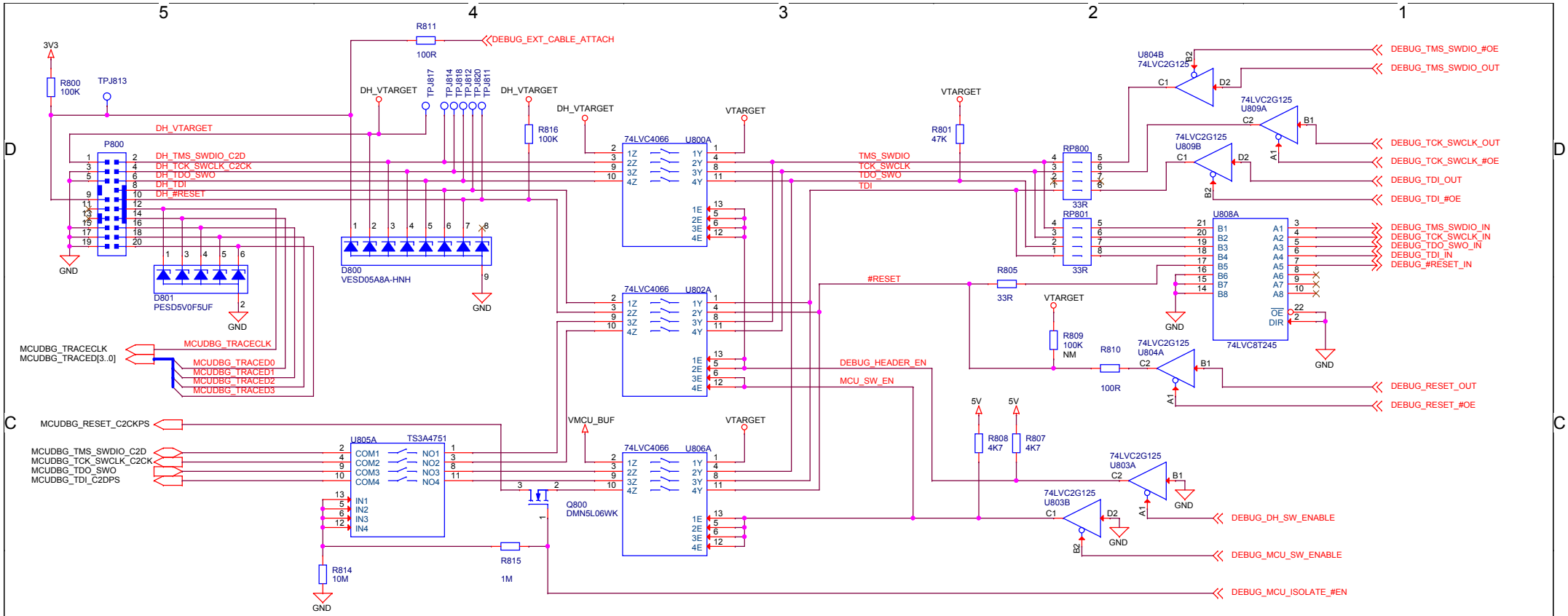

Power & Decoupling

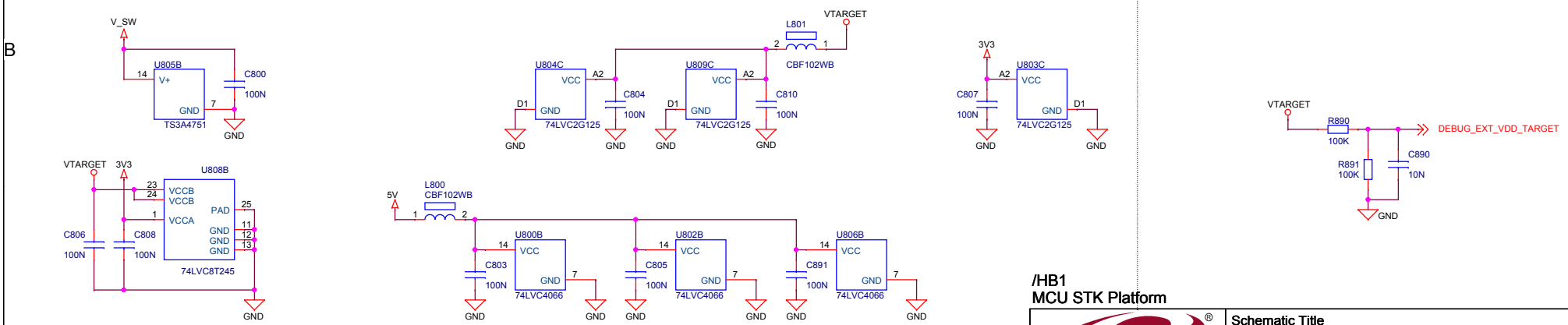

Mode	DEBUG_MCU_SW_ENABLE	DEBUG_DH_SW_ENABLE	DEBUG_BUF_#OE	ISOLATE_#EN	DH_VTARGET	VTARGET
Debug Out	0	1	0	0	External voltage	External voltage
MCU Debug	1	0	0	1	Disconnected	VMCU
Debug In	1	1	1	1	VMCU	VMCU
Debug Off	1	1	1	0	-	-

/HB1
MCU STK Platform

SILICON LABS

Designed: DDB	Approved: JNO
Size A3	BOM Doc No: <Cage Code>
Design Created Date: Monday, May 12, 2014	

Schematic Title
MCU Starter Kit Platform

Page Title
Debug Interface

Document number <Doc>		Revision <RevCode>
Sheet Created Date Monday, May 12, 2014	Sheet Modified Date Wednesday, October 22, 2014	Sheet 1 of 1

COPYRIGHT SILICON LABORATORIES INC. 2020 CONFIDENTIAL - SUBJECT TO TERMS OF USE

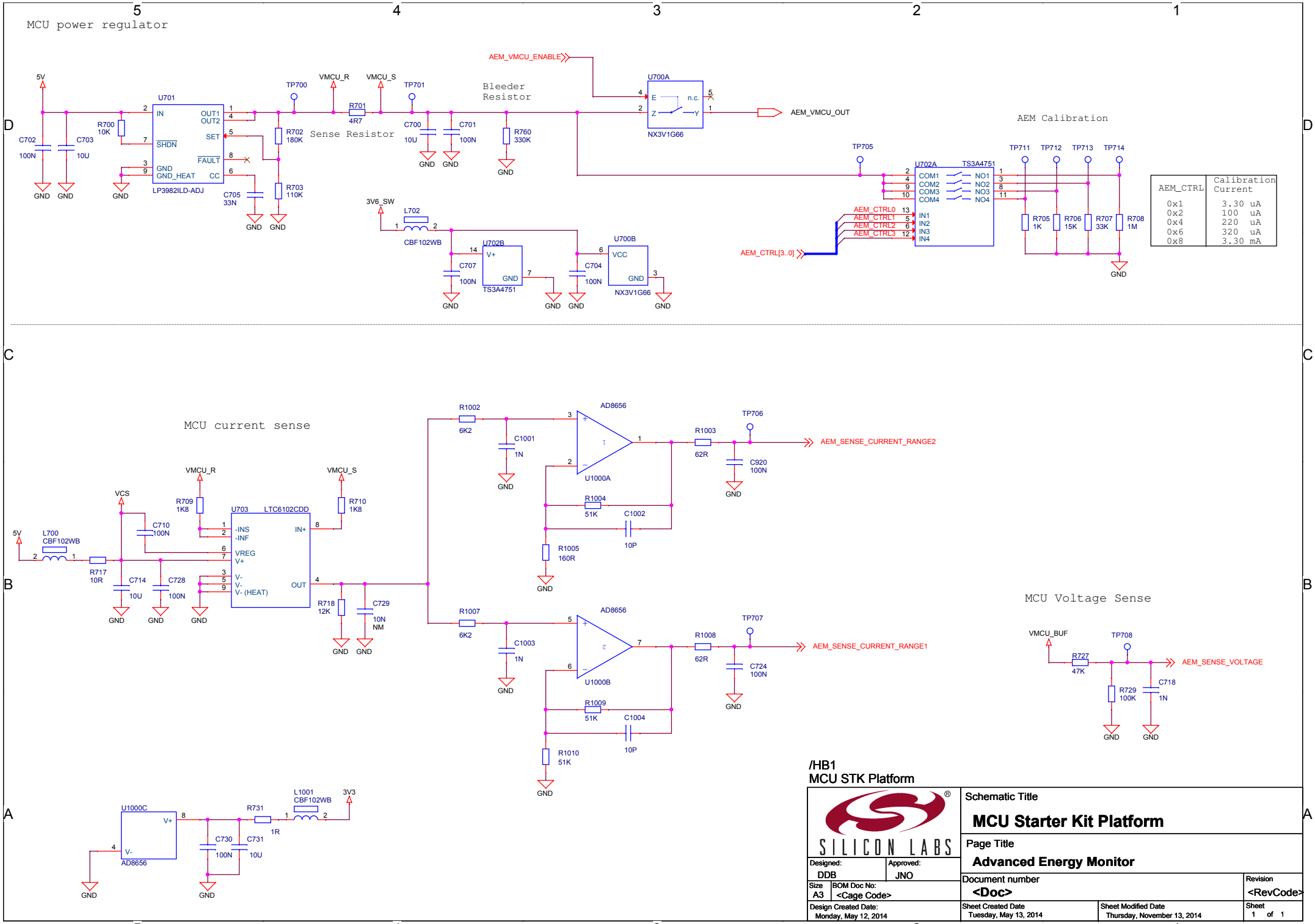

/HB1
MCU STK Platform

Schematic Title	MCU Starter Kit Platform
Page Title	Advanced Energy Monitor
Designed: DDB	Approved: JNO
Size A3	BOM Doc No: <Cage Code>
Document number	<Doc>
Revision	<RevCode>
Design Created Date: Monday, May 12, 2014	
Sheet Created Date Tuesday, May 13, 2014	Sheet Modified Date Thursday, November 13, 2014
Sheet 1 of 1	

COPYRIGHT SILICON LABORATORIES INC. 2020 CONFIDENTIAL - SUBJECT TO TERMS OF USE

ADC reference voltage

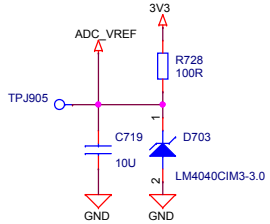

CTRLMCU EEPROM

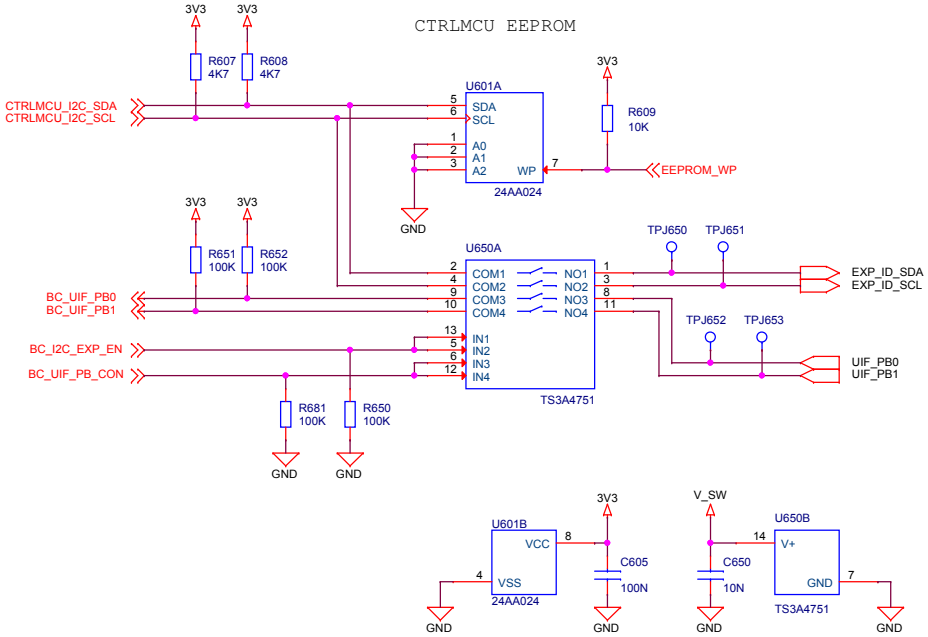

CTRLMCU SERIAL FLASH

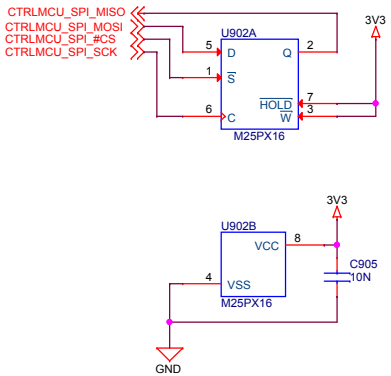

POWER SENSE

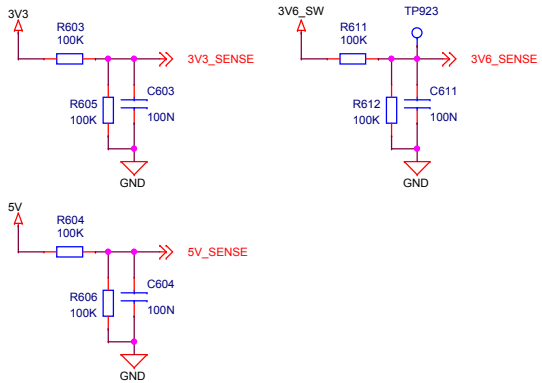

/HB1/CMCU1
Control MCU

SILICON LABS	Schematic Title: **EFM32 Starter Kit Board Controller**	
	Page Title: **Board Controller Misc**	
Designed: ANB / Approved: JNO	Document number: **BRD2010A**	Revision: **PA12**
Size: A3 / BOM Doc No: <Cage Code>	Sheet Created Date: Wednesday, February 11, 2015	Sheet Modified Date: Wednesday, February 11, 2015
Design Created Date: Monday, May 12, 2014		Sheet 1 of 2

COPYRIGHT SILICON LABORATORIES INC. 2020 CONFIDENTIAL - SUBJECT TO TERMS OF USE

Breakout Connections

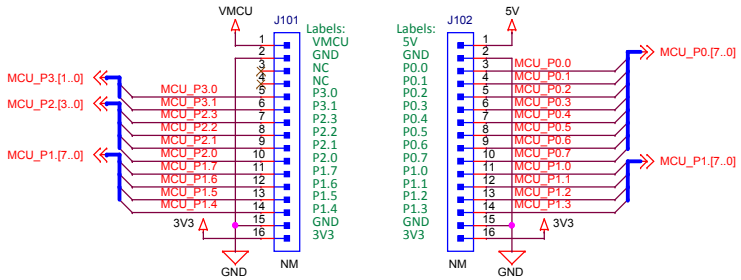

RGB LED

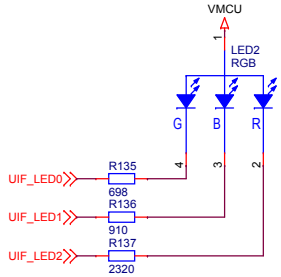

Analog Joystick

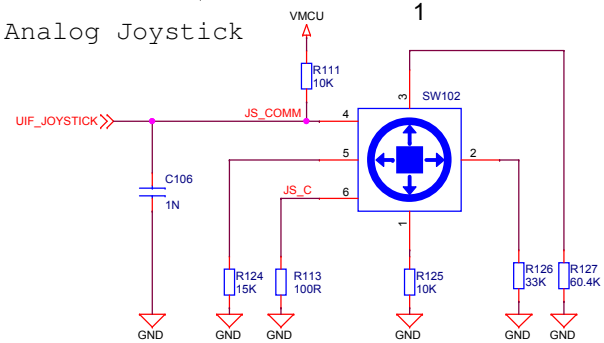

EXP port

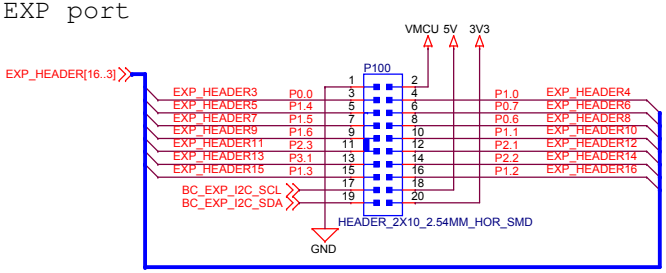

EXP-Header Functionality

** Indicates potential STK hardware conflicts

1	GND			
3	P0.0		CMP0.0/ADC0.0	
5	P1.4		CMP1.4/ADC0.12	** STK LED0
7	P1.5		CMP1.5/ADC0.13	** STK LED1
9	P1.6		CMP1.6/ADC0.14	** STK LED2
11	P2.3		CMP1.12/ADC0.23	
13	P3.1			
15	P1.3	I2C0_SCL	CMP1.3/ADC0.11	
17	Reserved for EXP Board Identification			
19	Reserved for EXP Board Identification			

2	VMCU		
4	P1.0	SPI0_MOSI	CMP1.0/ADC0.8
6	P0.7	SPI0_MISO	CMP0.7/ADC0.7
8	P0.6	SPI0_SCK	CMP0.6/ADC0.6
10	P1.1	SPI0_NSS	CMP1.1/ADC0.9
12	P2.1	UART1_TX	CMP1.10/ADC0.21
14	P2.2	UART1_RX	CMP1.11/ADC0.22
16	P1.2	I2C0_SDA	CMP1.2/ADC0.10
18	5V		
20	3V3		

U.FL ADC Connection

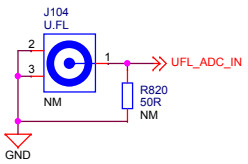

Memory LCD-TFT Display & Multiplexer

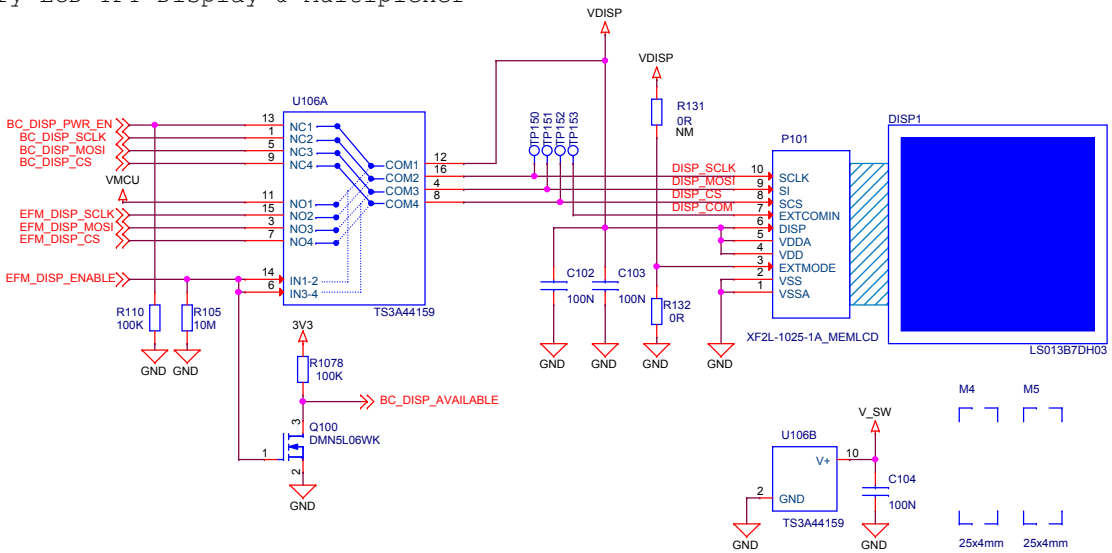

The EFM8 always controls ownership of the display using the EFM_DISP_ENABLE signal.

EFM_DISP_ENABLE	DISP_CTRL	VDISP
0	BC	BC_DISP_PWR_EN
1	EFM	VMCU

User pushbuttons

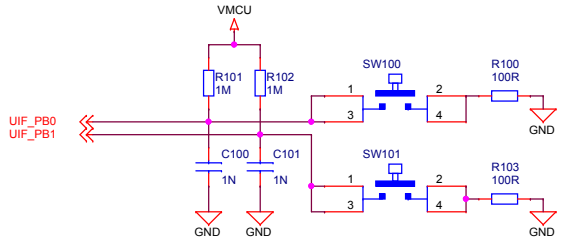

RESET Pushbutton

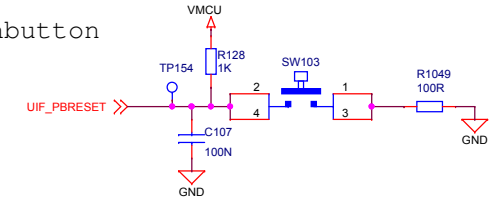

STK

Schematic Title	EFM8UB1 Universal Bee Starter Kit
Page Title	User Interfaces
Designed: MRW	Approved: JNO
Size A3	BOM Doc No:
Document number	BRD5000A
Revision	A04
Design Created Date:	Wednesday, December 03, 2008
Sheet Created Date	Wednesday, August 28, 2013
Sheet Modified Date	Thursday, February 12, 2015
Sheet	2 of 10

COPYRIGHT SILICON LABORATORIES INC. 2020 CONFIDENTIAL - SUBJECT TO TERMS OF USE

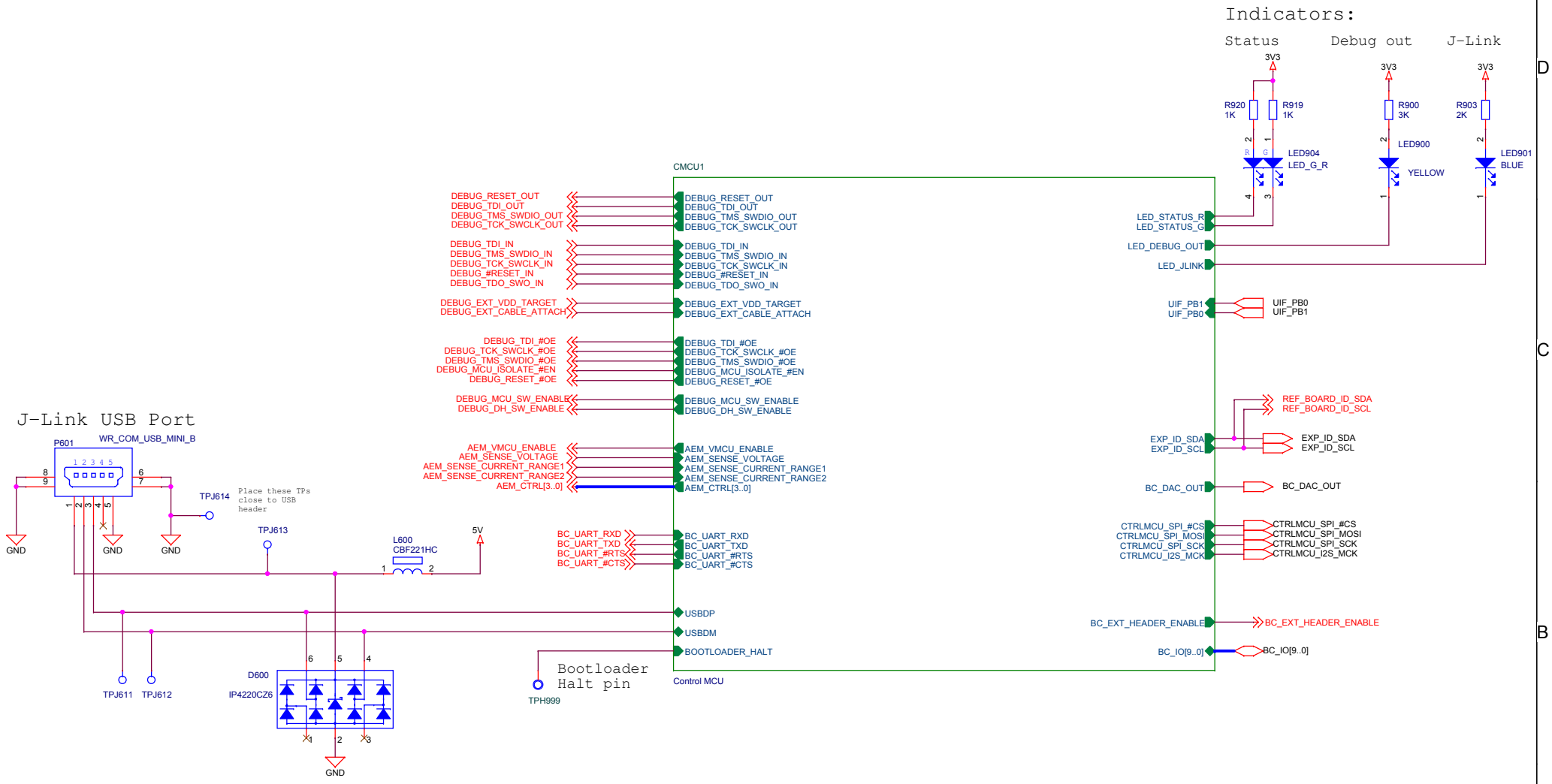

/HB1
MCU STK Platform

Schematic Title	EFM32 Starter Kit Board Controller
Page Title	Board Controller
Designed: ANB	Approved: JNO
Size A3	BOM Doc No: <Cage Code>
Document number	BRD2010A
Revision	PA12
Design Created Date: Monday, May 12, 2014	
Sheet Created Date	Wednesday, May 14, 2014
Sheet Modified Date	Thursday, February 12, 2015
Sheet	2 of 2

COPYRIGHT SILICON LABORATORIES INC. 2020 CONFIDENTIAL - SUBJECT TO TERMS OF USE

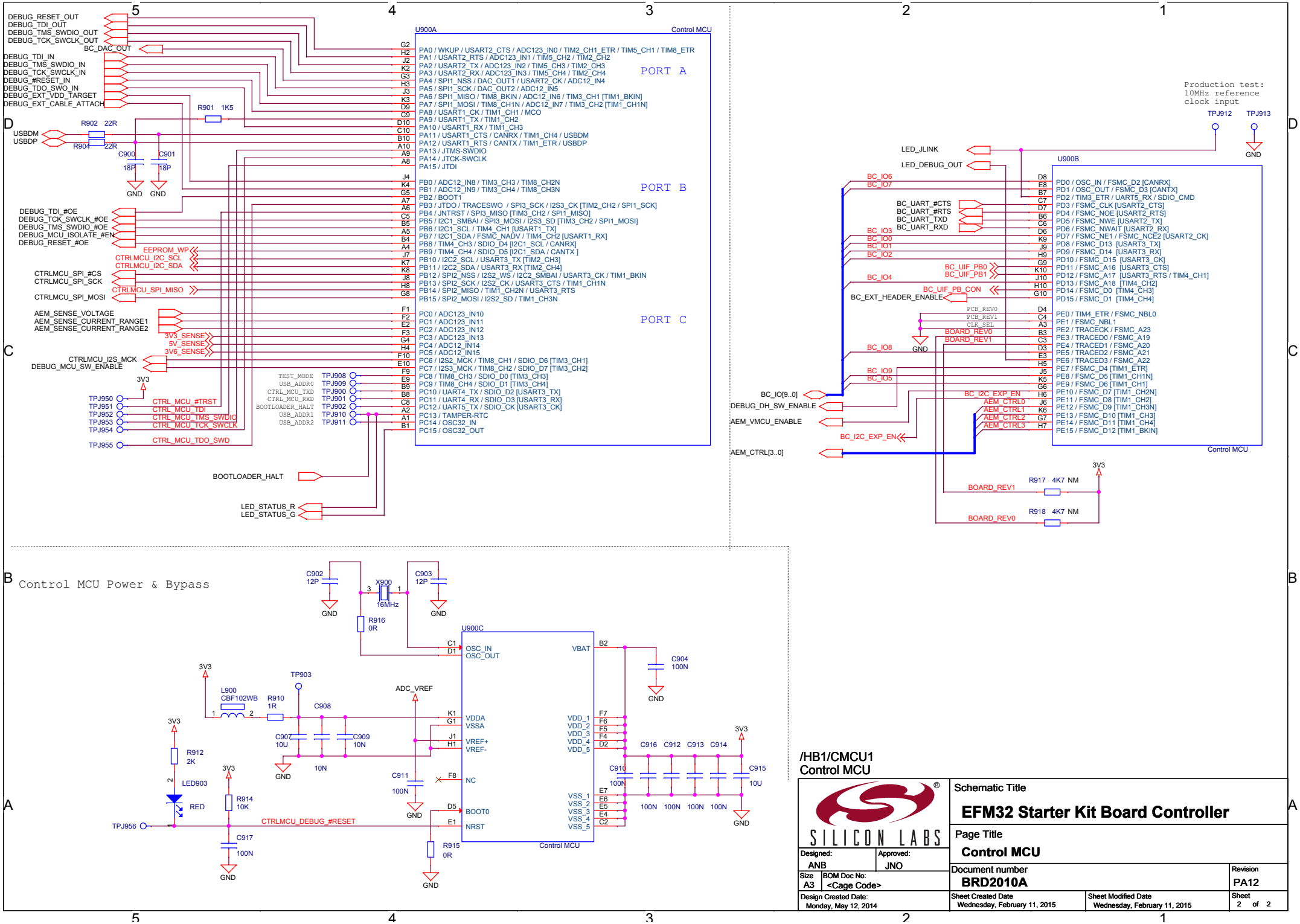

COPYRIGHT SILICON LABORATORIES INC. 2020 CONFIDENTIAL - SUBJECT TO TERMS OF USE

P0 Connections

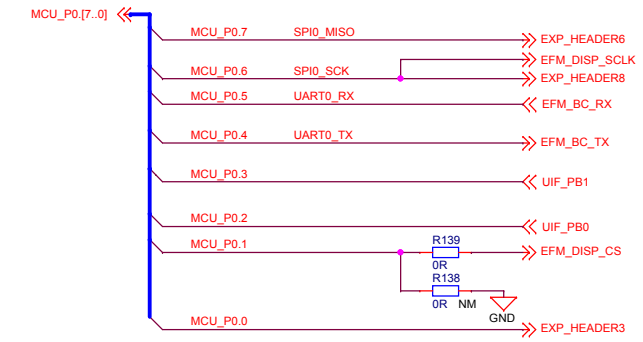

P1 Connections

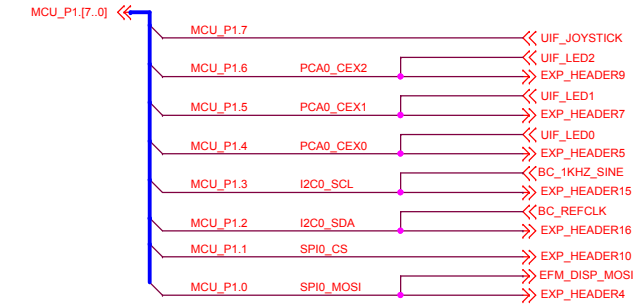

P2 Connections

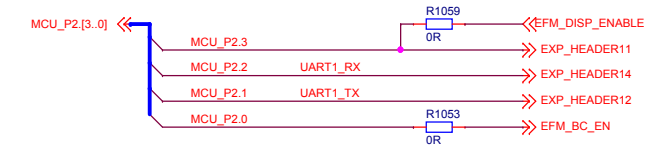

P3 & DEBUG Connections

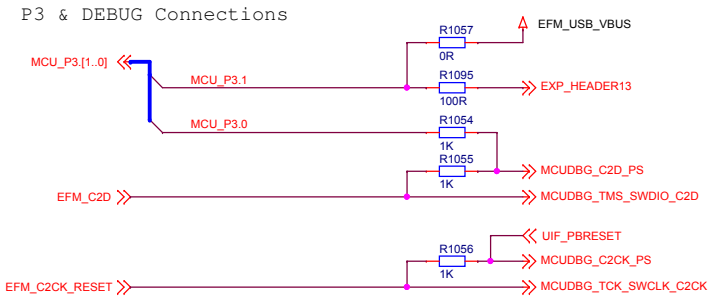

SILICON LABS	Schematic Title: **EFM8UB1 Universal Bee Starter Kit**		
	Page Title: **Signal Assignments**		
Designed: MRW / Approved: JNO	Document number: **BRD5000A**		Revision: A04
Size: A3 / BOM Doc No: <Cage Code>			
Design Created Date: Wednesday, December 03, 2008	Sheet Created Date: Wednesday, August 28, 2013	Sheet Modified Date: Thursday, December 18, 2014	Sheet 3 of 10

COPYRIGHT SILICON LABORATORIES INC. 2020 CONFIDENTIAL - SUBJECT TO TERMS OF USE

Power Switch

SWITCH POS	MODE DESCRIPTION
AEM	AEM Enabled, VMCU sourced from external 3.3V LDO powered by BC USB 5V supply
USB	AEM Disabled, VMCU sourced from internal 3.3V LDO powered by EFM8 USB 5V
BAT	AEM Disabled, VMCU sourced from external coin-cell battery or external power supply

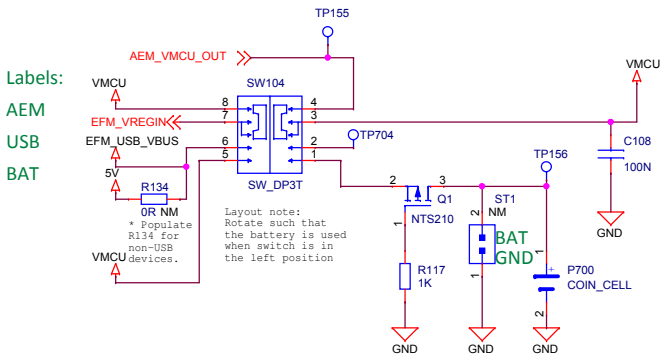

C2 Debug Header

USB Connection and ESD protection

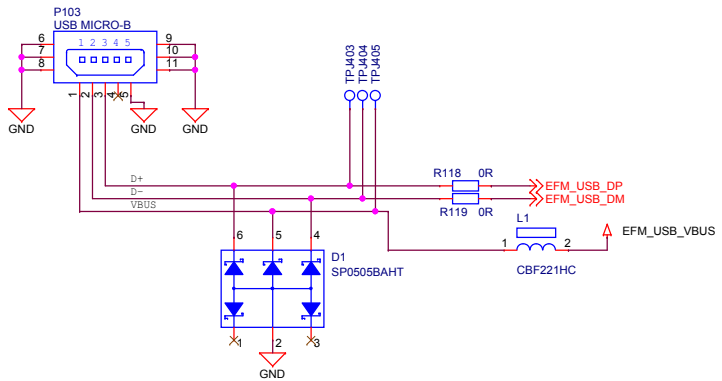

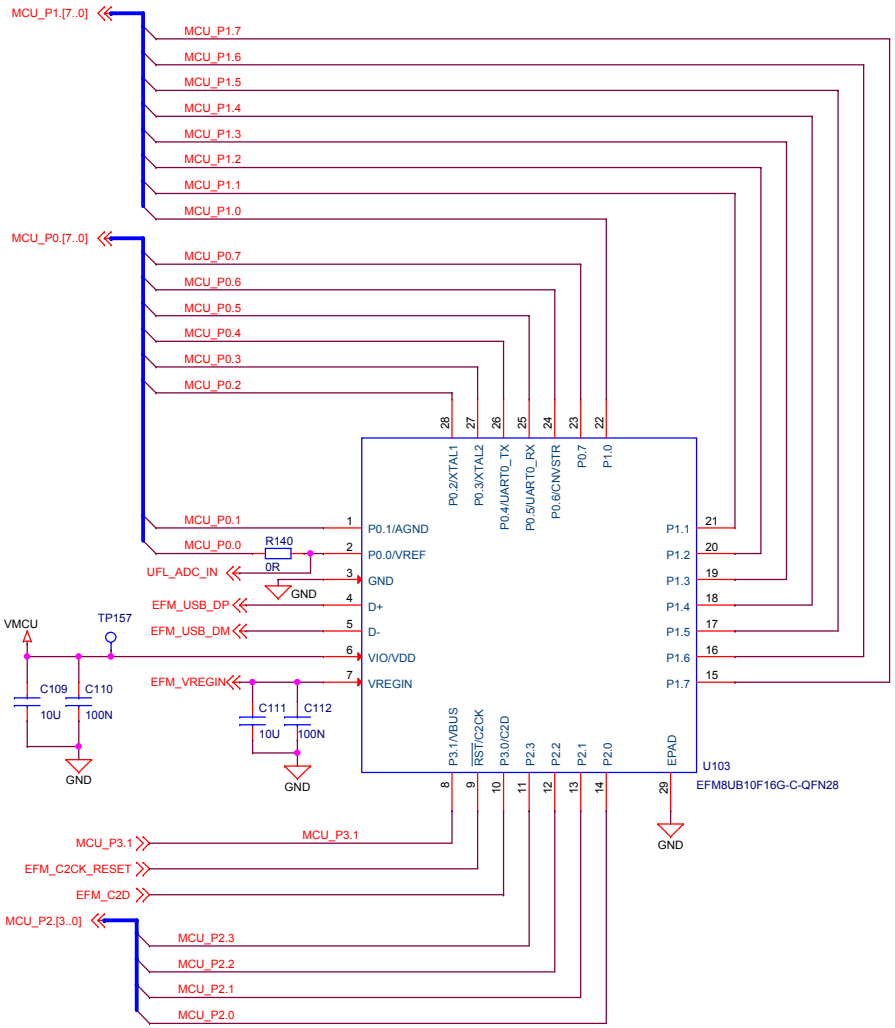

SILICON LABS	Schematic Title: EFM8UB1 Universal Bee Starter Kit		
	Page Title: EFM8 I/O		
Designed: MRW	Approved: JNO	Document number: BRD5000A	Revision: A04
Size: A3	BOM Doc No: <Cage Code>		
Design Created Date: Wednesday, December 03, 2008		Sheet Created Date: Wednesday, August 28, 2013	Sheet Modified Date: Tuesday, July 25, 2017
			Sheet 4 of 10

COPYRIGHT SILICON LABORATORIES INC. 2020 CONFIDENTIAL - SUBJECT TO TERMS OF USE

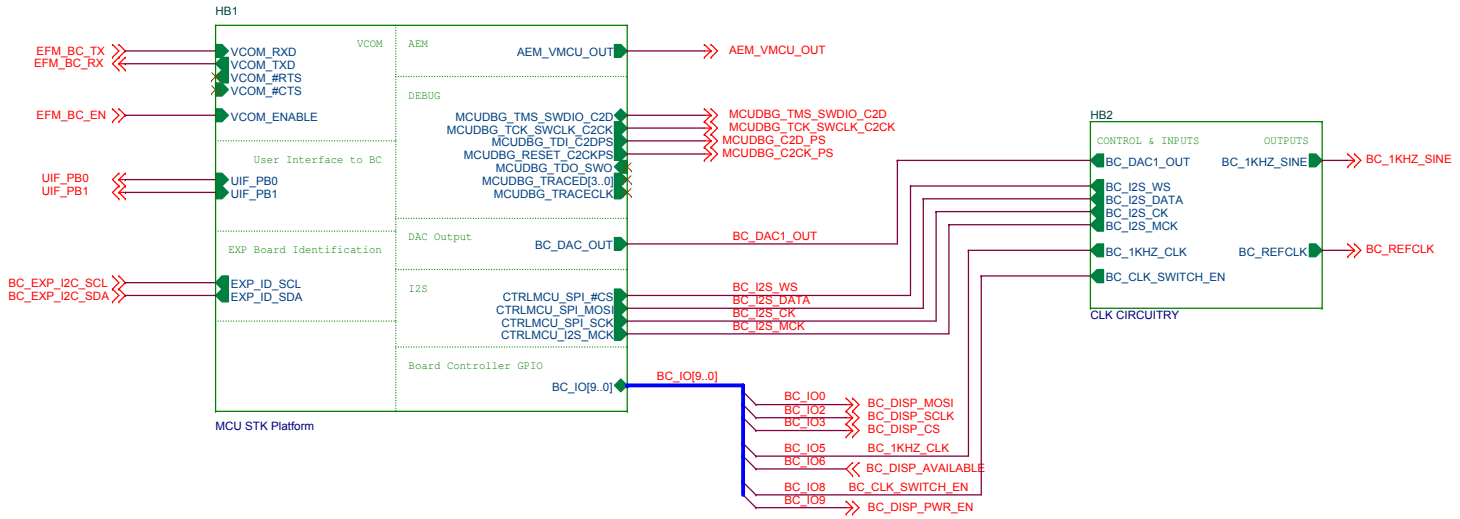

Schematic Title	EFM8UB1 Universal Bee Starter Kit	
Page Title	STK Common Platform	
Designed: MRW	Approved: JNO	
Size A3	BOM Doc No: <Cage Code>	Document number BRD5000A — Revision A04
Design Created Date: Wednesday, December 03, 2008	Sheet Created Date: Thursday, May 15, 2014	Sheet Modified Date: Thursday, February 12, 2015 — Sheet 5 of 10

COPYRIGHT SILICON LABORATORIES INC. 2020 CONFIDENTIAL - SUBJECT TO TERMS OF USE

LPF

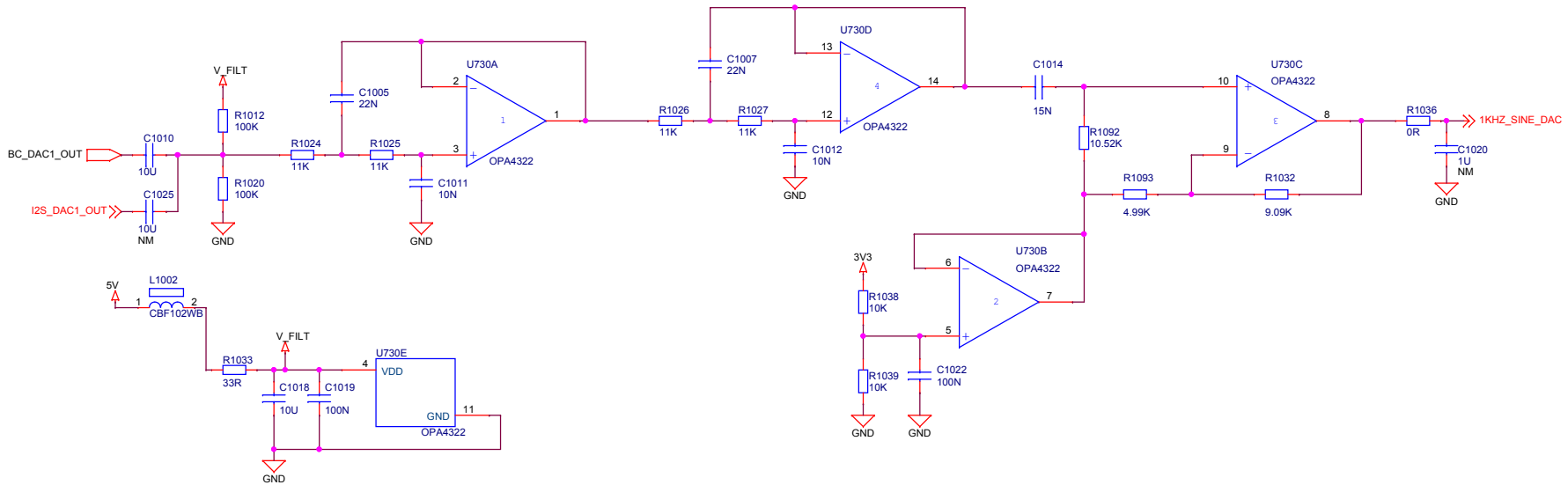

I2S DAC

Layout note: Place All components here + C1025
on secondary sice

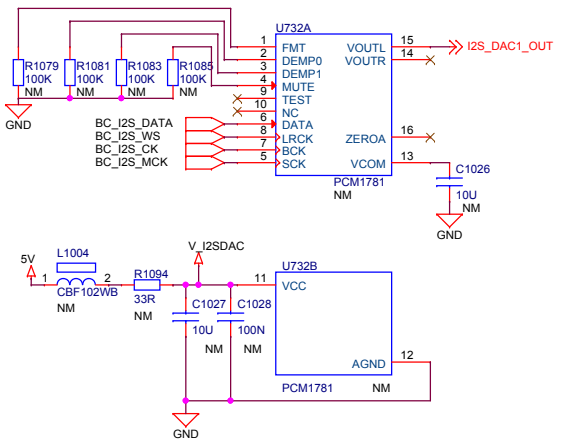

Analog Switch

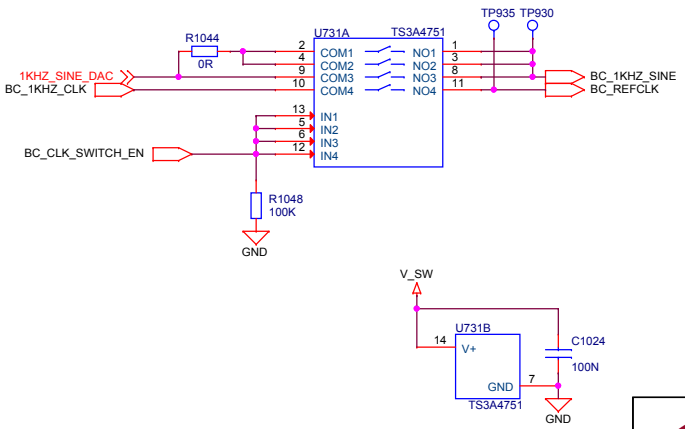

SILICON LABS	Schematic Title: **EFM8 Universal Bee Starter Kit**		
	Page Title: **Functional Blocks**		
Designed: MRW	Approved: JNO	Document number: **BRD5000A**	Revision: PA01
Size: A3	BOM Doc No: <Cage Code>		
Design Created Date: Wednesday, December 03, 2008		Sheet Created Date: Monday, June 16, 2014	Sheet Modified Date: Friday, November 21, 2014
			Sheet 5 of 5

COPYRIGHT SILICON LABORATORIES INC. 2020 CONFIDENTIAL - SUBJECT TO TERMS OF USE