EFM8UB1 Universal Bee STK

Board Function	Page
Title Page	1
User Interfaces	2
Signal Assignments	3
EFM8 I/O	4
STK Common Platform	5
Advanced Energy Monitor	6
Board Controller	7
Debug Interface	8
Power & Misc	9
Clock & Filter	10

Revision History

Rev.	Description
A00	Initial prototype version.
A01	Initial version released for series production.
A02	Changed ESD protection diode for the EFM8's USB.
A03	Updated PCB revision.

PCB1

PCB5000

STK

Designed: MRW	Approved: JNO	Schematic Title: EFM8UB1 Universal Bee Starter Kit	
Size: A3	BOM Doc No:	Page Title: Title Page	
Design Created Date: Wednesday, December 03, 2008		Document number: BRD5000A	Revision: A03
		Sheet Created Date: Thursday, May 15, 2014	Sheet Modified Date: Monday, March 23, 2015
			Sheet 1 of 10

Breakout Connections

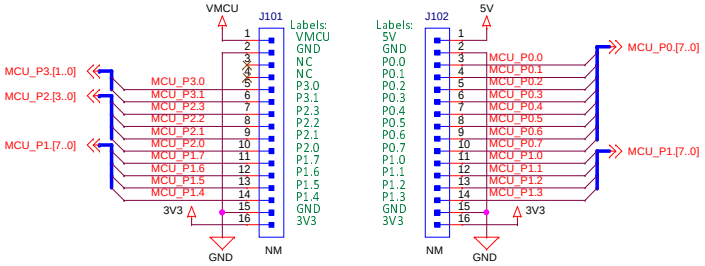

RGB LED

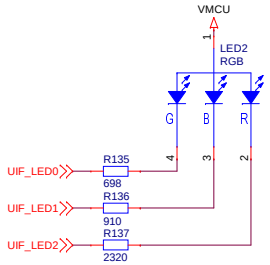

Analog Joystick

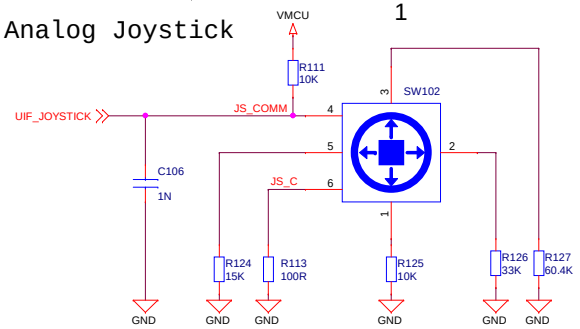

EXP port

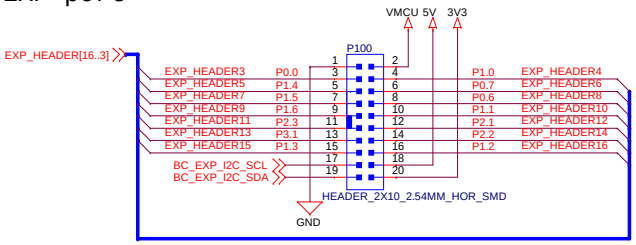

EXP-Header Functionality

** Indicates potential STK hardware conflicts

1	GND			
3	P0.0		CMP0.0/ADC0.0	
5	P1.4		CMP1.4/ADC0.12	** STK LED0
7	P1.5		CMP1.5/ADC0.13	** STK LED1
9	P1.6		CMP1.6/ADC0.14	** STK LED2
11	P2.3		CMP1.12/ADC0.23	
13	P3.1			
15	P1.3	I2C0_SCL	CMP1.3/ADC0.11	
17	Reserved for EXP Board Identification			
19	Reserved for EXP Board Identification			

2	VMCU		
4	P1.0	SPI0_MOSI	CMP1.0/ADC0.8
6	P0.7	SPI0_MISO	CMP0.7/ADC0.7
8	P0.6	SPI0_SCK	CMP0.6/ADC0.6
10	P1.1	SPI0_NSS	CMP1.1/ADC0.9
12	P2.1	UART1_TX	CMP1.10/ADC0.21
14	P2.2	UART1_RX	CMP1.11/ADC0.22
16	P1.2	I2C0_SDA	CMP1.2/ADC0.10
18	5V		
20	3V3		

U.FL ADC Connection

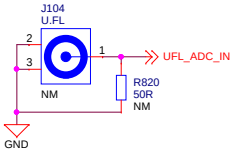

Memory LCD-TFT Display & Multiplexer

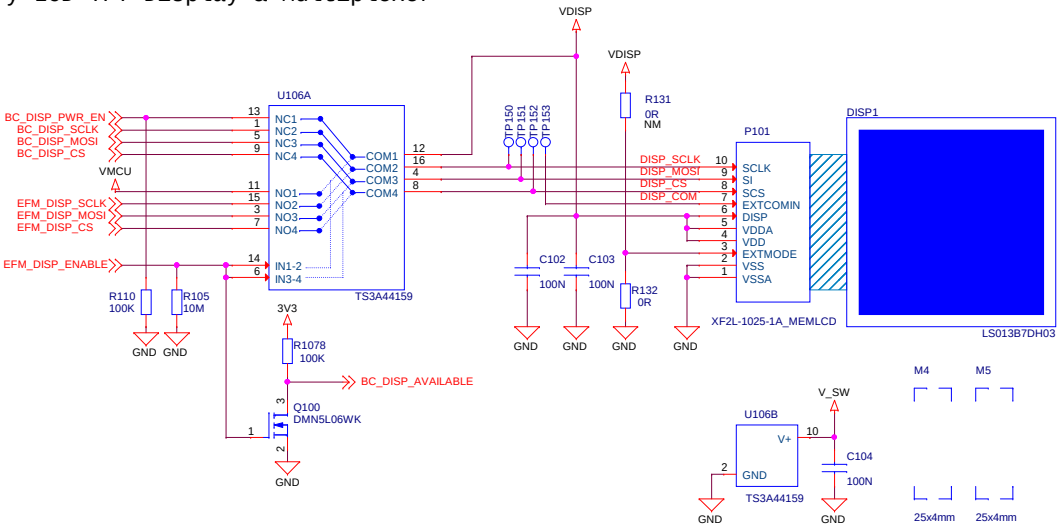

The EFM8 always controls ownership of the display using the EFM_DISP_ENABLE signal.

EFM_DISP_ENABLE	DISP_CTRL	VDISP
0	BC	BC_DISP_PWR_EN
1	EFM	VMCU

User pushbuttons

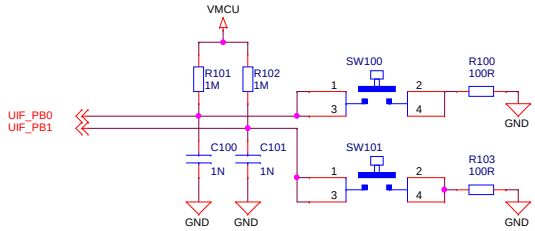

RESET Pushbutton

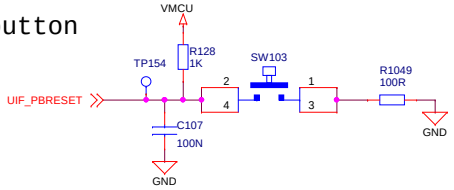

STK

SILICON LABS

Schematic Title	EFM8UB1 Universal Bee Starter Kit
Page Title	User Interfaces
Designed: MRW	Approved: JNO
Size A3	BOM Doc No:
Document number	BRD5000A
Revision	A03
Design Created Date:	Wednesday, December 03, 2008
Sheet Created Date	Wednesday, August 28, 2013
Sheet Modified Date	Thursday, February 12, 2015
Sheet	2 of 10

P0 Connections

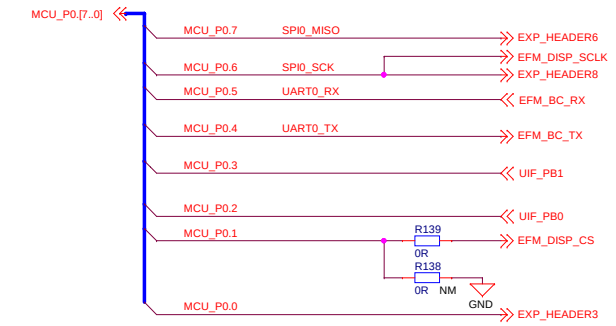

P1 Connections

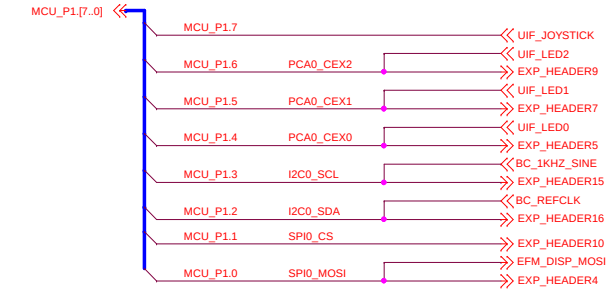

P2 Connections

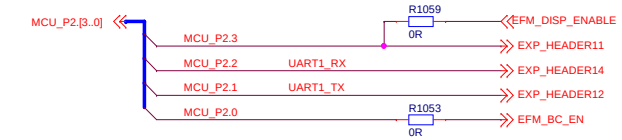

P3 & DEBUG Connections

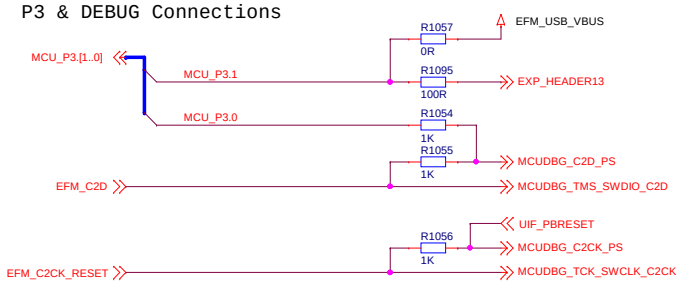

SILICON LABS	Schematic Title: **EFM8UB1 Universal Bee Starter Kit**		
	Page Title: **Signal Assignments**		
Designed: MRW	Approved: JNO	Document number: **BRD5000A**	Revision: A03
Size: A3	BOM Doc No: <Cage Code>		
Design Created Date: Wednesday, December 03, 2008	Sheet Created Date: Wednesday, August 28, 2013	Sheet Modified Date: Thursday, December 18, 2014	Sheet 3 of 10

Power Switch

SWITCH POS	MODE DESCRIPTION
AEM	AEM Enabled, VMCU sourced from external 3.3V LDO powered by BC USB 5V supply
USB	AEM Disabled, VMCU sourced from internal 3.3V LDO powered by EFM8 USB 5V
BAT	AEM Disabled, VMCU sourced from external coin-cell battery or external power supply

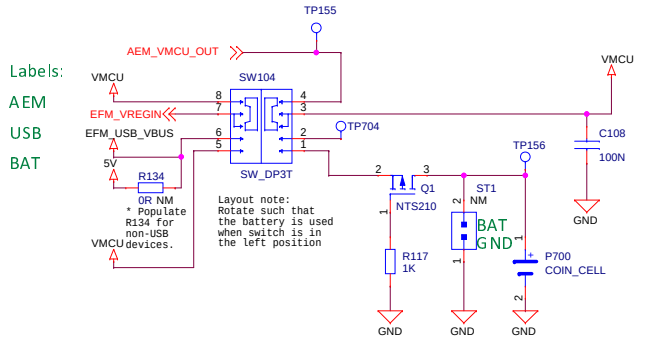

C2 Debug Header

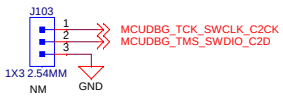

USB Connection and ESD protection

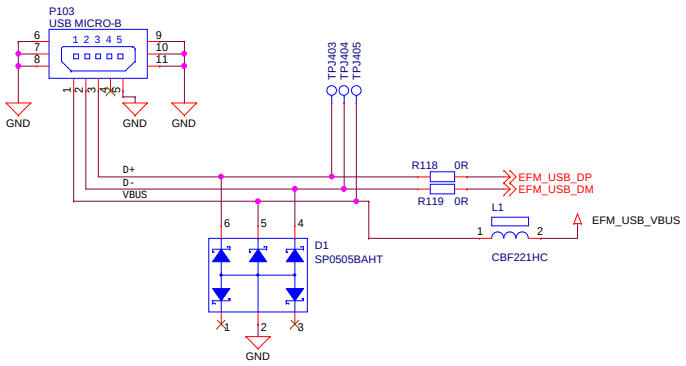

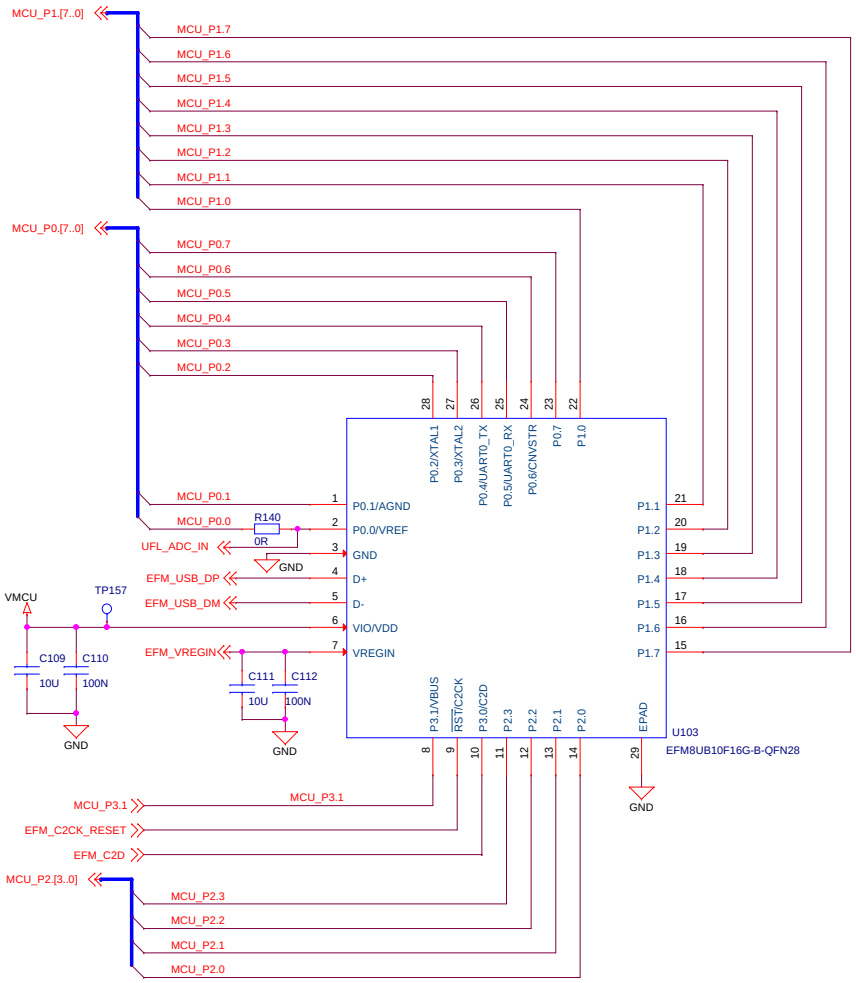

SILICON LABS	Schematic Title: **EFM8UB1 Universal Bee Starter Kit**		
	Page Title: **EFM8 I/O**		
Designed: MRW	Approved: JNO	Document number: **BRD5000A**	Revision: A03
Size: A3	BOM Doc No: <Cage Code>		
Design Created Date: Wednesday, December 03, 2008	Sheet Created Date: Wednesday, August 28, 2013	Sheet Modified Date: Thursday, December 18, 2014	Sheet 4 of 10

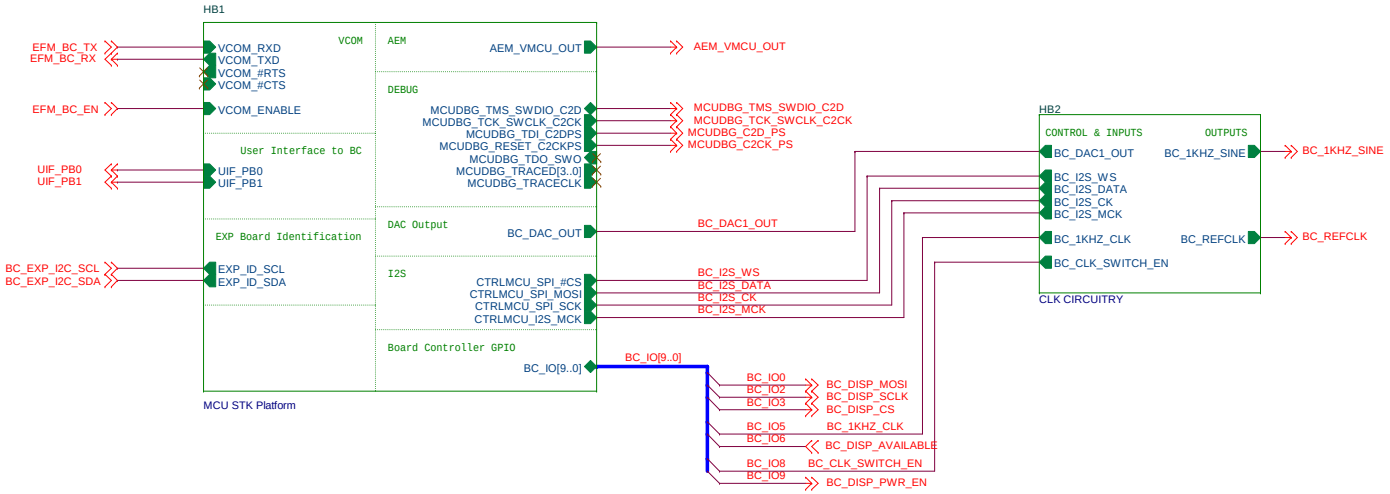

SILICON LABS	Schematic Title: **EFM8UB1 Universal Bee Starter Kit**	
	Page Title: **STK Common Platform**	
Designed: MRW	Approved: JNO	
Size: A3	BOM Doc No: <Cage Code>	Document number: **BRD5000A** — Revision: A03
Design Created Date: Wednesday, December 03, 2008	Sheet Created Date: Thursday, May 15, 2014	Sheet Modified Date: Thursday, February 12, 2015 — Sheet 5 of 10

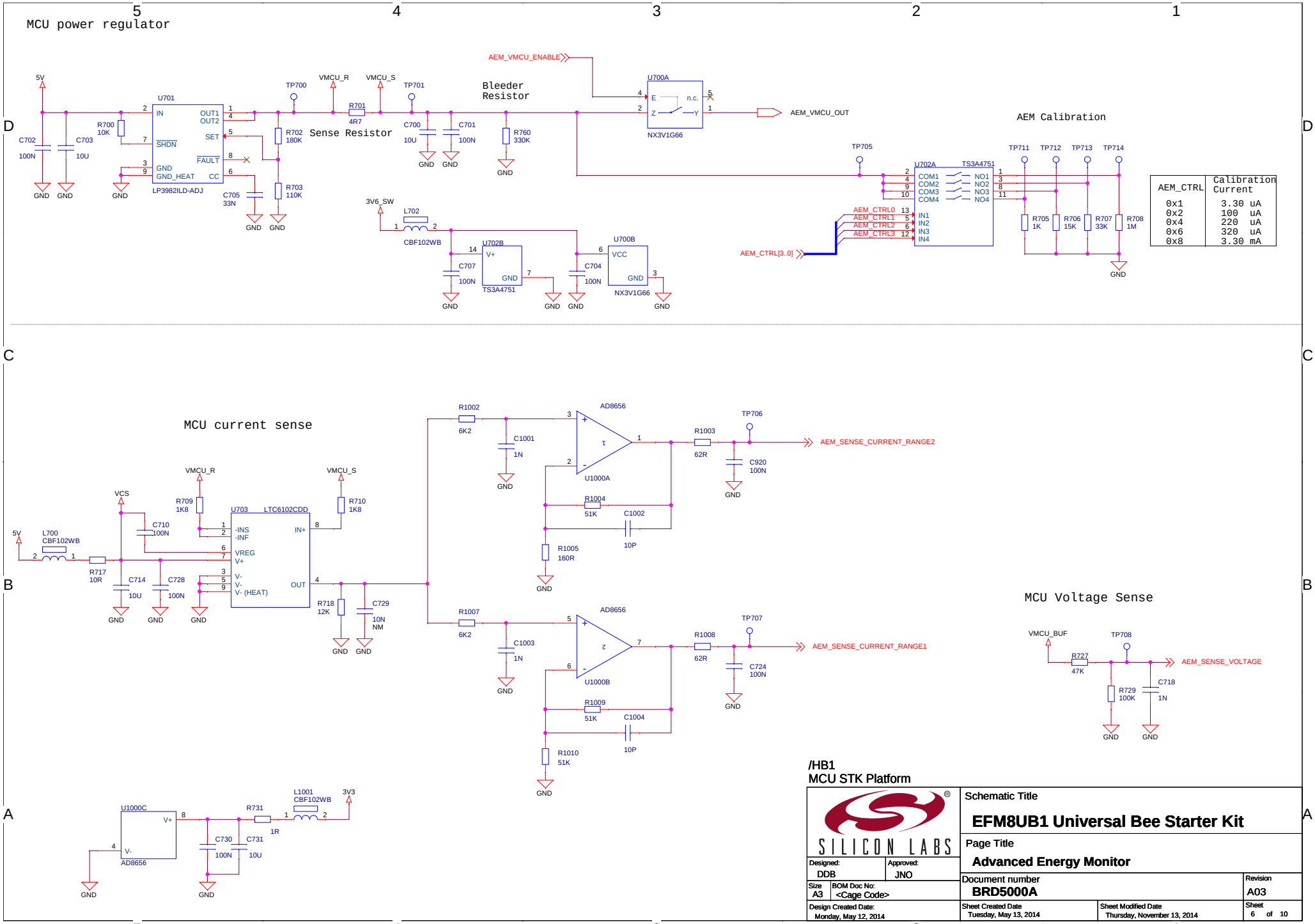
MCU power regulator
5V
C702
100N
C703
10U
R700
10K
U701
IN
OUT1
OUT2
SET
SHDN
FAULT
GND
GND_HEAT
CC
LP3982ILD-ADJ
C705
33N
R702
180K
R703
110K
TP700
VMCU_R
VMCU_S
R701
4R7
Sense Resistor
TP701
C700
10U
C701
100N
Bleeder
Resistor
R760
330K
AEM_VMCU_ENABLE
U700A
NX3V1G66
AEM_VMCU_OUT
3V6_SW
L702
CBF102WB
U702B
TS3A4751
C707
100N
U700B
VCC
C704
100N
GND
AEM Calibration
TP705
U702A
TS3A4751
COM1
COM2
COM3
COM4
NO1
NO2
NO3
NO4
IN1
IN2
IN3
IN4
AEM_CTRL0
AEM_CTRL1
AEM_CTRL2
AEM_CTRL3
AEM_CTRL[3..0]
TP711
TP712
TP713
TP714
R705
1K
R706
15K
R707
33K
R708
1M
AEM_CTRL
Calibration
Current
0x1 3.30 uA
0x2 100 uA
0x4 220 uA
0x6 320 uA
0x8 3.30 mA
MCU current sense
VCS
VMCU_R
VMCU_S
R709
1K8
R710
1K8
C710
100N
U703
LTC6102CDD
-INS
-INF
VREG
V+
V-
V- (HEAT)
IN+
OUT
L700
CBF102WB
R717
10R
C714
10U
C728
100N
R718
12K
C729
10N
NM
R1002
6K2
C1001
1N
AD8656
U1000A
R1003
62R
TP706
AEM_SENSE_CURRENT_RANGE2
C920
100N
R1004
51K
C1002
10P
R1005
160R
R1007
6K2
C1003
1N
U1000B
R1008
62R
TP707
AEM_SENSE_CURRENT_RANGE1
C724
100N
R1009
51K
C1004
10P
R1010
51K
MCU Voltage Sense
VMCU_BUF
TP708
R727
47K
AEM_SENSE_VOLTAGE
R729
100K
C718
1N
U1000C
AD8656
R731
1R
L1001
CBF102WB
3V3
C730
100N
C731
10U
/HB1
MCU STK Platform
SILICON LABS
Schematic Title
EFM8UB1 Universal Bee Starter Kit
Page Title
Advanced Energy Monitor
Designed: DDB
Approved: JNO
Size A3
BOM Doc No: <Cage Code>
Document number BRD5000A
Revision A03
Design Created Date: Monday, May 12, 2014
Sheet Created Date Tuesday, May 13, 2014
Sheet Modified Date Thursday, November 13, 2014
Sheet 6 of 10

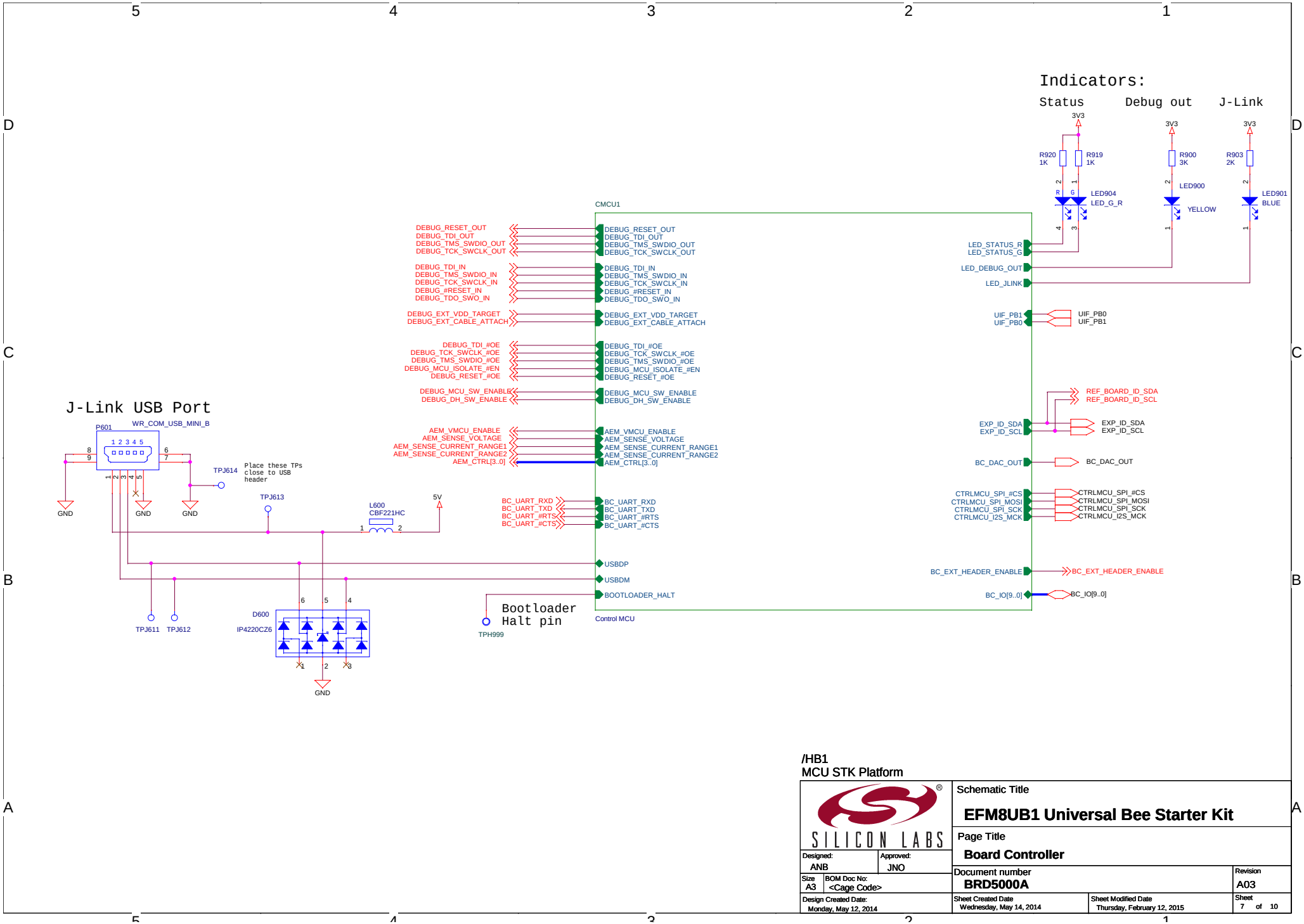

/HB1
MCU STK Platform

Schematic Title	EFM8UB1 Universal Bee Starter Kit
Page Title	Board Controller
Designed: ANB	Approved: JNO
Size A3	BOM Doc No: <Cage Code>
Document number	BRD5000A
Revision	A03
Design Created Date:	Monday, May 12, 2014
Sheet Created Date	Wednesday, May 14, 2014
Sheet Modified Date	Thursday, February 12, 2015
Sheet	7 of 10

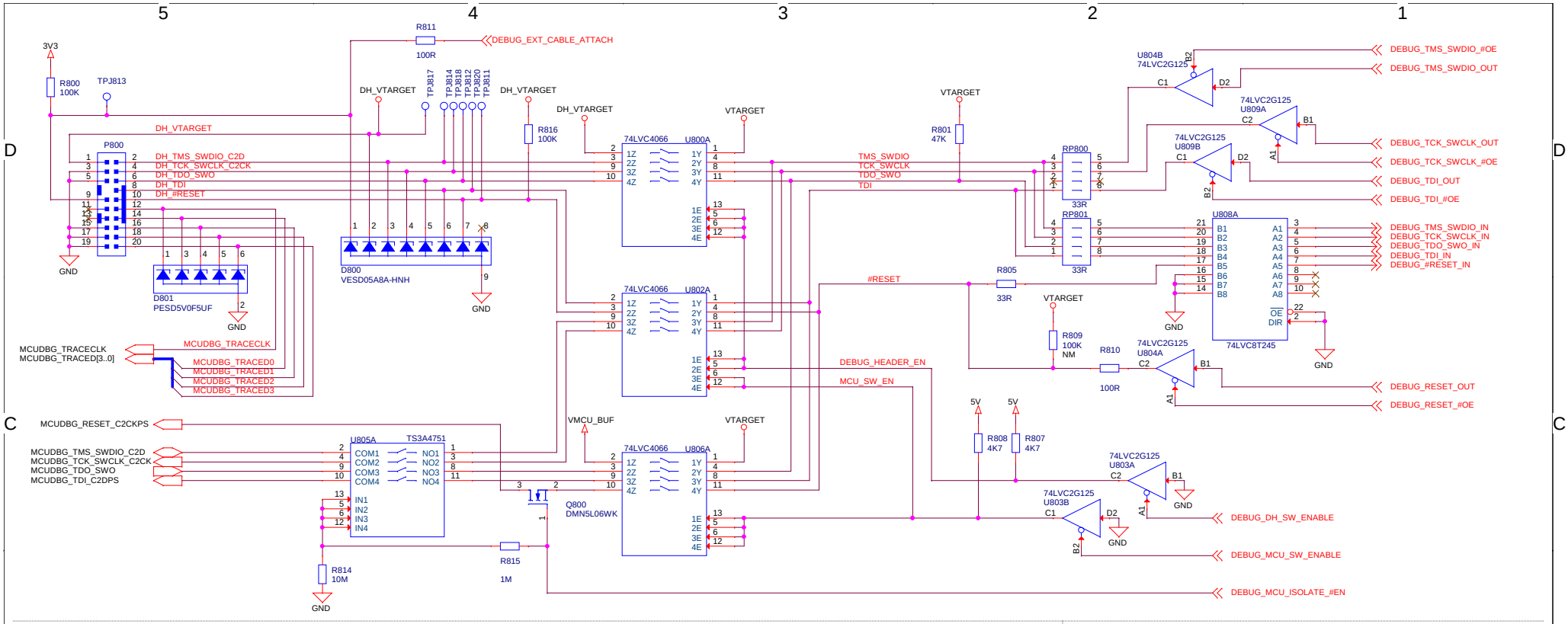

Power & Decoupling

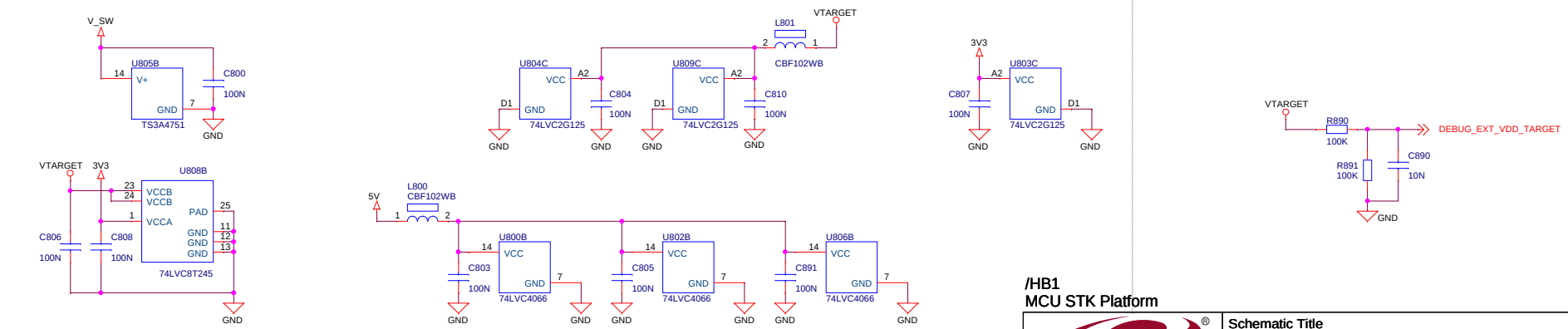

Mode	DEBUG_MCU_SW_ENABLE	DEBUG_DH_SW_ENABLE	DEBUG_BUF_#OE	ISOLATE_#EN	DH_VTARGET	VTARGET
Debug Out	0	1	0	0	External voltage	External voltage
MCU Debug	1	0	0	1	Disconnected	VMCU
Debug In	1	1	1	1	VMCU	VMCU
Debug Off	1	1	1	0	-	-

/HB1
MCU STK Platform

SILICON LABS

Schematic Title
EFM8UB1 Universal Bee Starter Kit

Page Title
Debug Interface

Designed: DDB	Approved: JNO		
Size A3	BOM Doc No: <Cage Code>	Document number BRD5000A	Revision A03
Design Created Date: Monday, May 12, 2014		Sheet Created Date Monday, May 12, 2014	Sheet Modified Date Wednesday, October 22, 2014
			Sheet 8 of 10

Virtual COM Port Interface

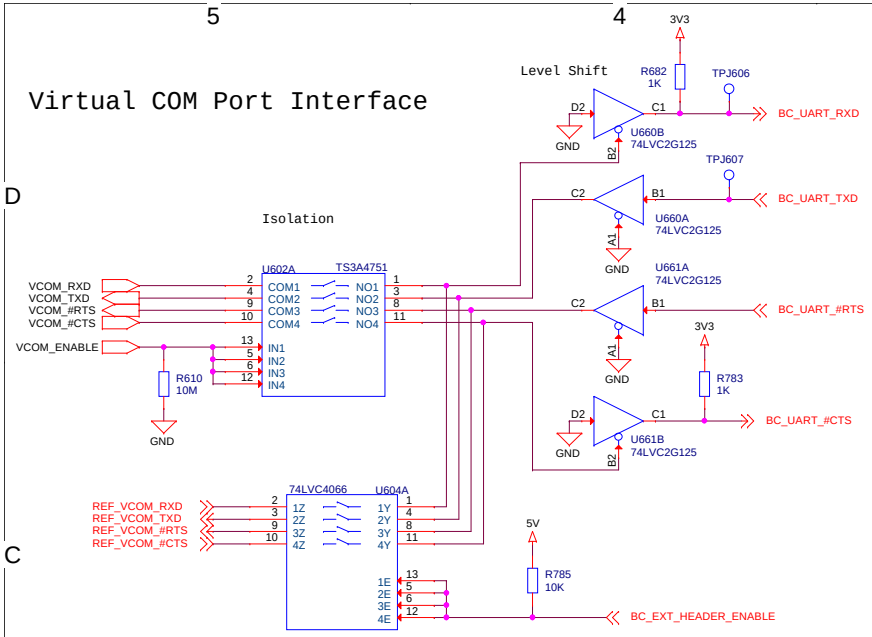

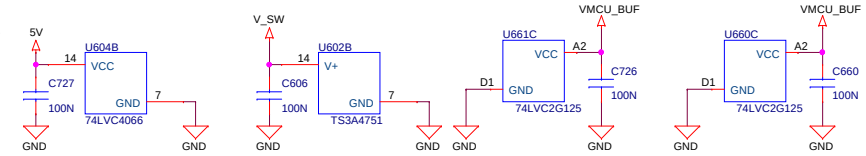

Connector for external reference designs boards

EXTERNAL BOARD

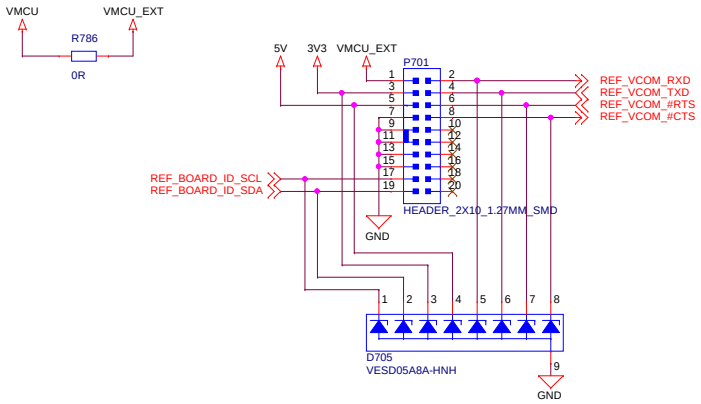

3V3 Regulator

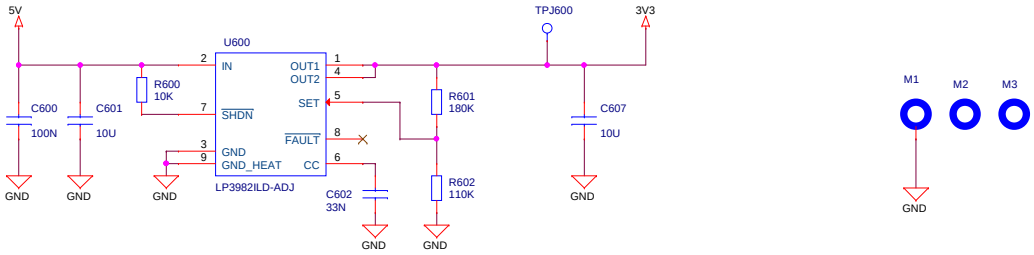

VMCU Voltage Mirror

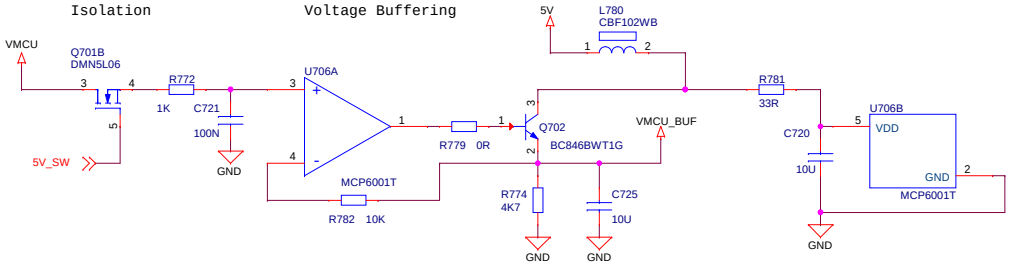

Power Supply for Analog Switches

The USB VBUS voltage is used to bias these transistors, turning the P-Channel MOSFETs (Q700) off, and the N-Channel MOSFETs (Q701) on.

J-Link USB Cable	PMOS State	NMOS State	V_SW	VMCU_SENSE
Connected	Off	ON	3.6V	VMCU
Disconnected	ON	OFF	VMCU	Isolated

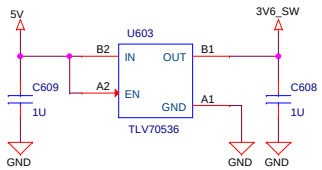

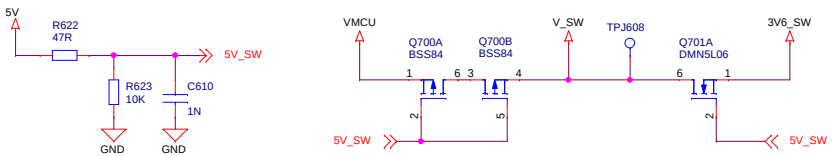

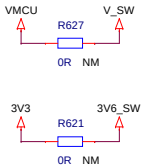

/HB1
MCU STK Platform

SILICON LABS	Schematic Title: **EFM8UB1 Universal Bee Starter Kit**	
	Page Title: **Power & Misc**	
Designed: DDB	Approved: JNO	
Size: A3	BOM Doc No: <Cage Code>	Document number: **BRD5000A** — Revision: A03
Design Created Date: Monday, May 12, 2014	Sheet Created Date: Monday, May 12, 2014	Sheet Modified Date: Tuesday, September 16, 2014 — Sheet 9 of 10

LPF

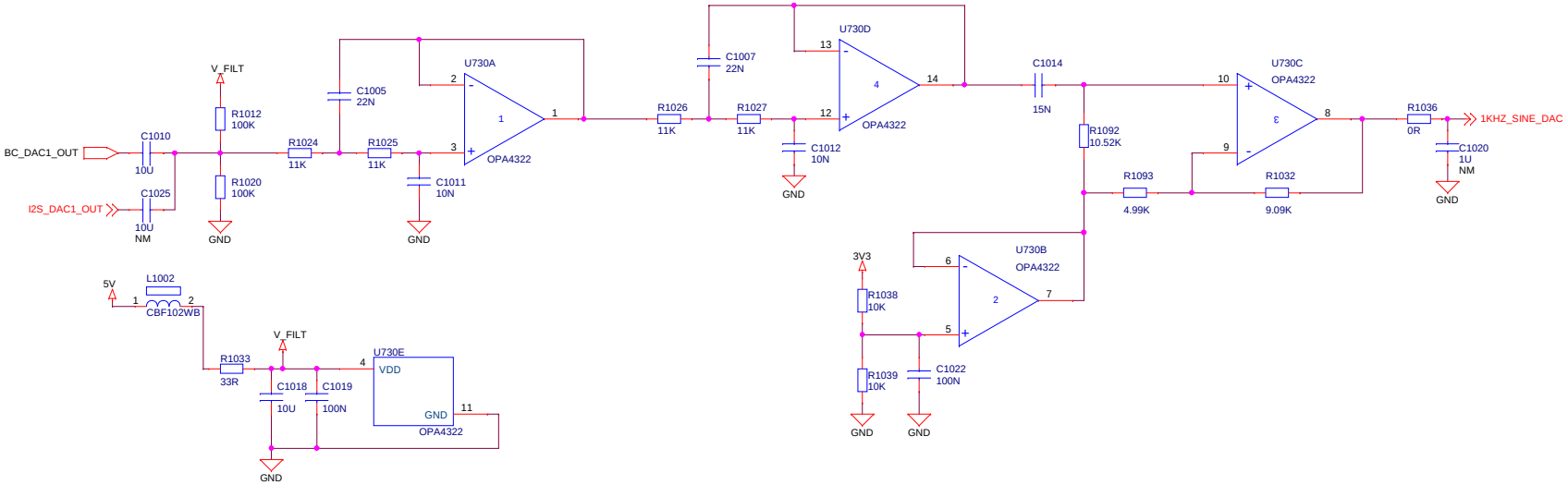

I2S DAC

Layout note: Place All components here + C1025
on secondary sice

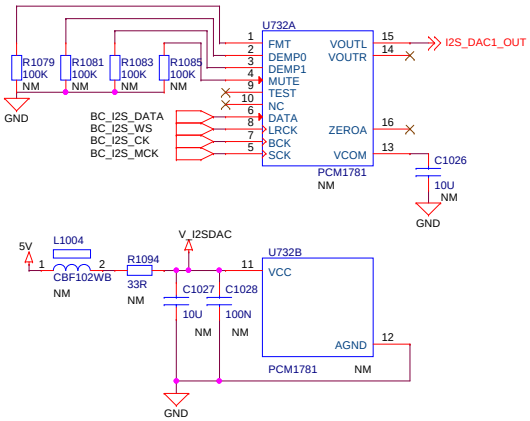

Analog Switch

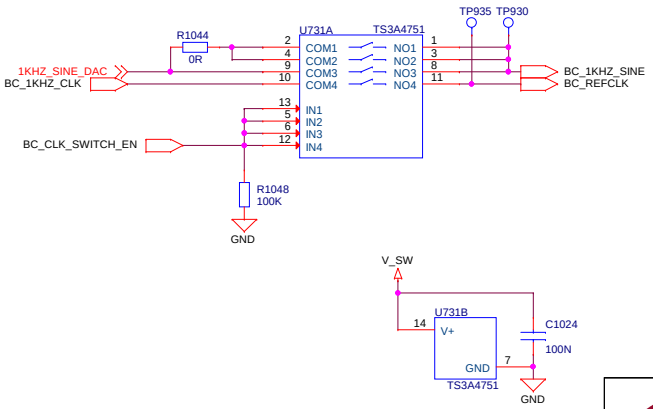

SILICON LABS	Schematic Title: **EFM8UB1 Universal Bee Starter Kit**		
	Page Title: **Clock & Filter**		
Designed: MRW	Approved: JNO	Document number: **BRD5000A**	Revision: A03
Size: A3	BOM Doc No: <Cage Code>		
Design Created Date: Wednesday, December 03, 2008	Sheet Created Date: Monday, June 16, 2014	Sheet Modified Date: Friday, November 21, 2014	Sheet 10 of 10

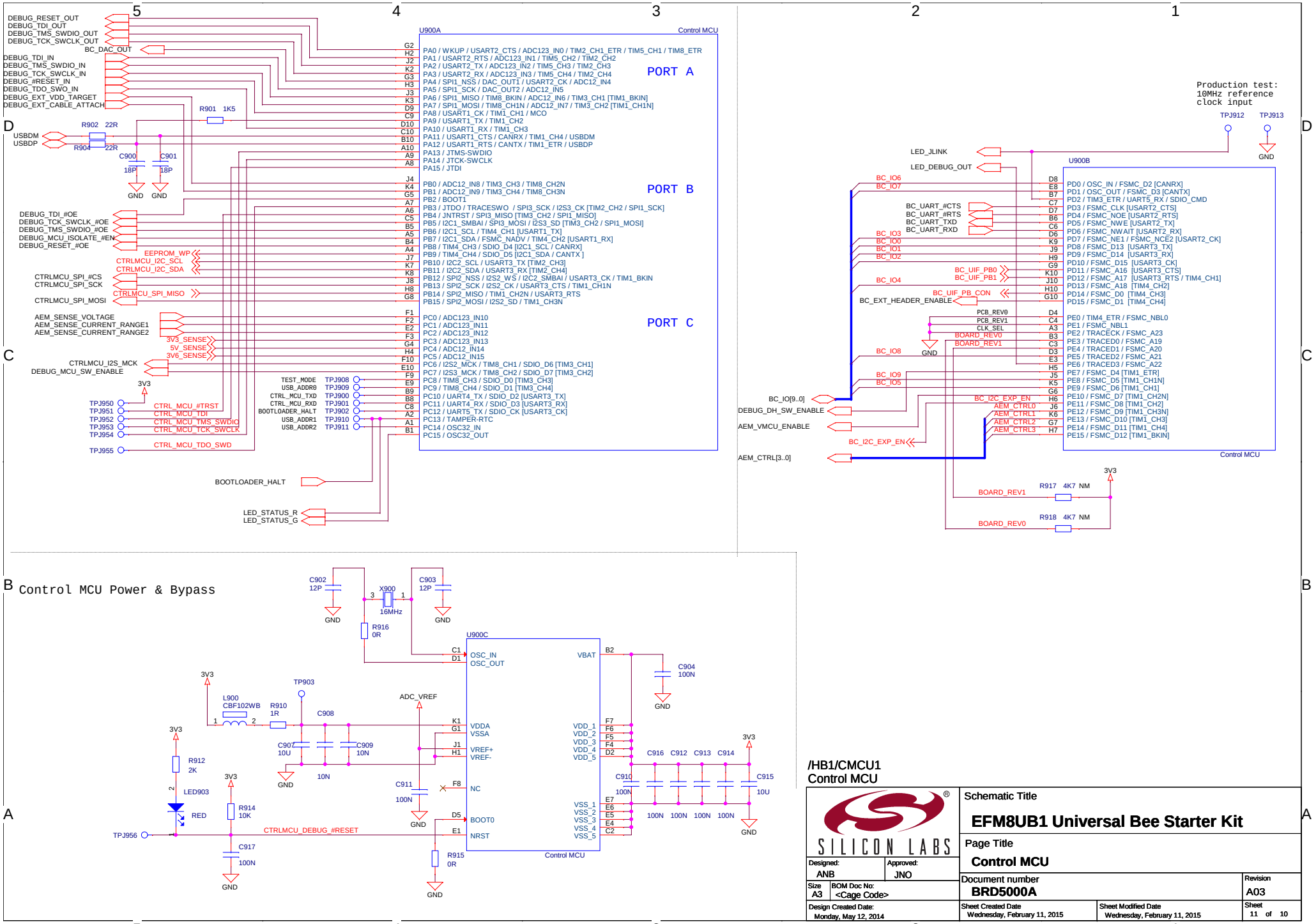

/HB1/CMCU1
Control MCU

SILICON LABS

Schematic Title	EFM8UB1 Universal Bee Starter Kit
Page Title	Control MCU
Designed: ANB	Approved: JNO
Size A3	BOM Doc No: <Cage Code>
Document number	BRD5000A
Revision	A03
Design Created Date:	Monday, May 12, 2014
Sheet Created Date	Wednesday, February 11, 2015
Sheet Modified Date	Wednesday, February 11, 2015
Sheet	11 of 10

ADC reference voltage

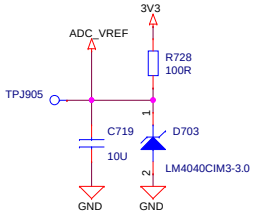

CTRLMCU EEPROM

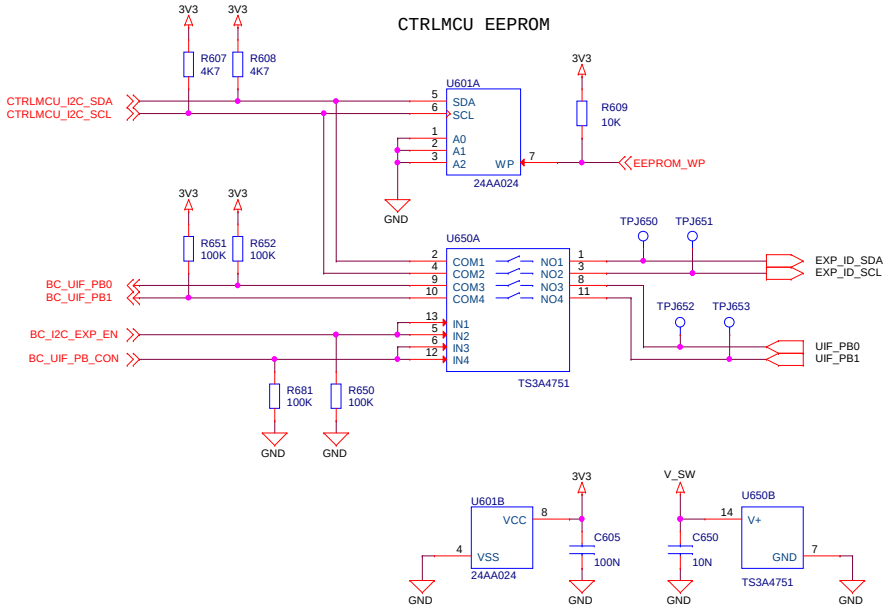

CTRLMCU SERIAL FLASH

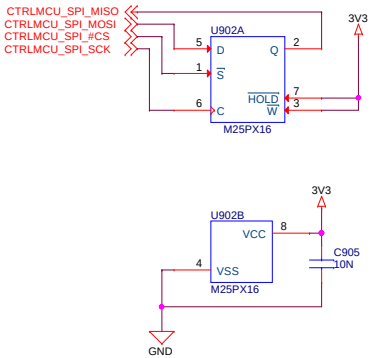

POWER SENSE

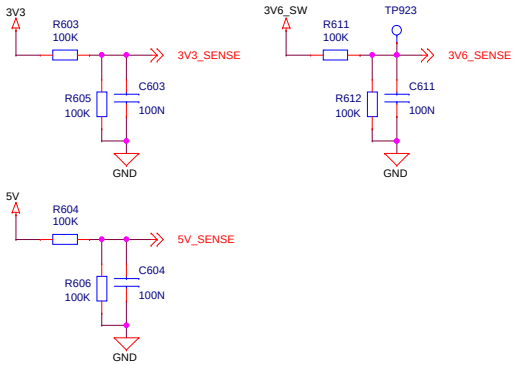

/HB1/CMCU1
Control MCU

SILICON LABS	Schematic Title: **EFM8UB1 Universal Bee Starter Kit**	
	Page Title: **Control MCU Misc**	
Designed: ANB	Approved: JNO	Document number: **BRD5000A**	Revision: A03
Size: A3	BOM Doc No: <Cage Code>		
Design Created Date: Monday, May 12, 2014	Sheet Created Date: Wednesday, February 11, 2015	Sheet Modified Date: Wednesday, February 11, 2015	Sheet 12 of 10