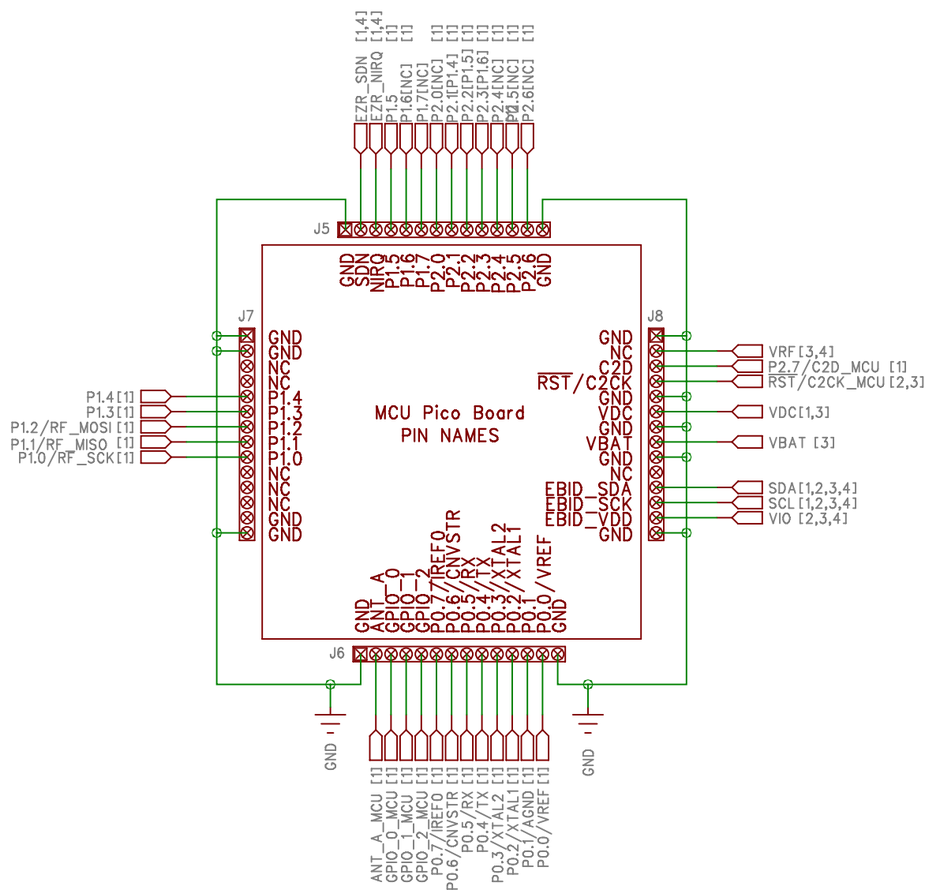

Primary configuration: Default connections with populated OR resistors
Secondary configuration: No Pop Resistors for optional connections

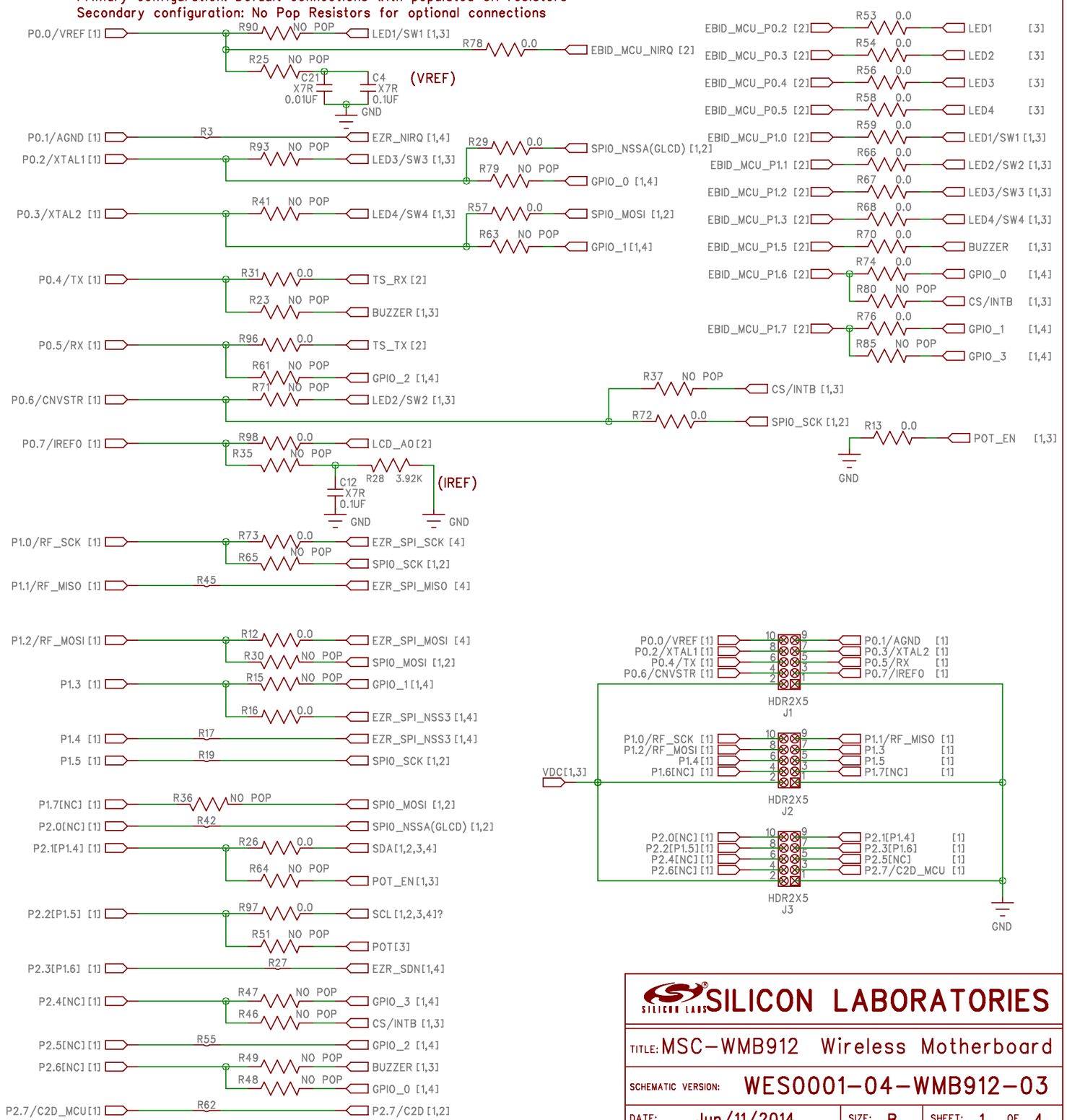

SILICON LABS SILICON LABORATORIES

TITLE:	MSC-WMB912 Wireless Motherboard
SCHEMATIC VERSION:	WES0001-04-WMB912-03
DATE: Jun/11/2014	SIZE: B — SHEET: 1 OF 4

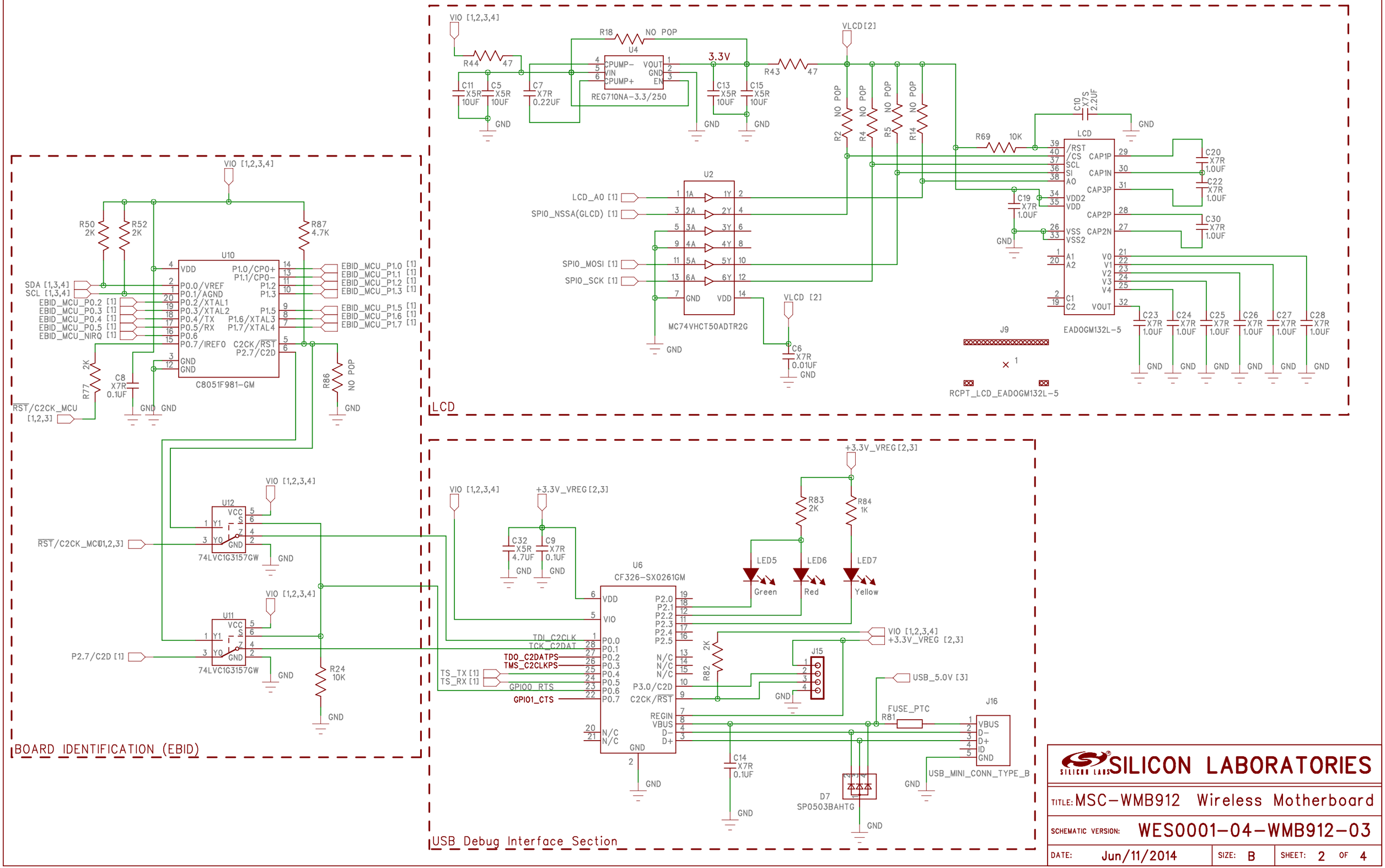

SILICON LABORATORIES

TITLE: MSC-WMB912 Wireless Motherboard

SCHEMATIC VERSION: WES0001-04-WMB912-03

DATE: Jun/11/2014 | SIZE: B | SHEET: 2 OF 4

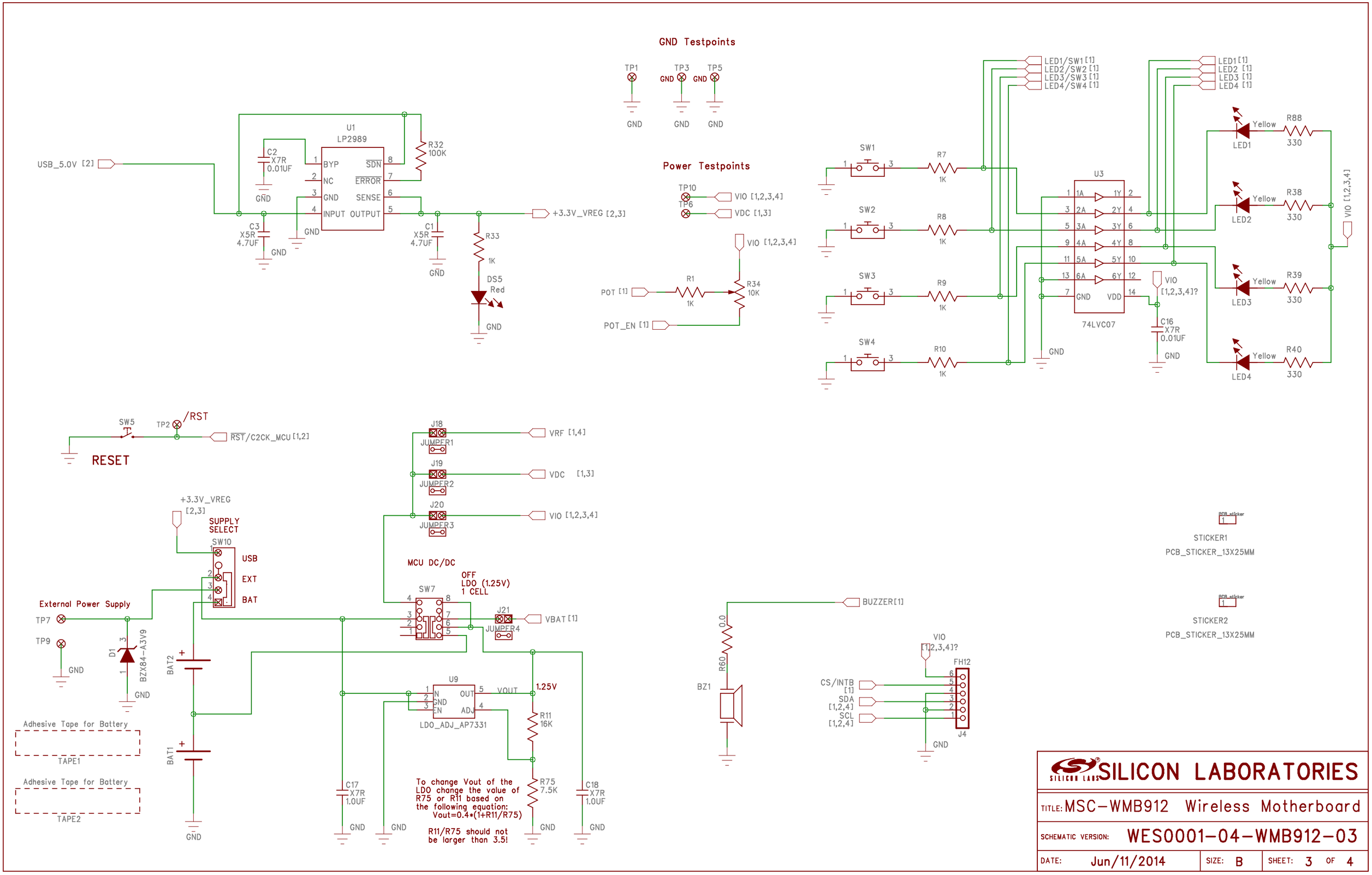

SILICON LABORATORIES

TITLE: MSC-WMB912 Wireless Motherboard

SCHEMATIC VERSION: WES0001-04-WMB912-03

DATE: Jun/11/2014 | SIZE: B | SHEET: 3 OF 4

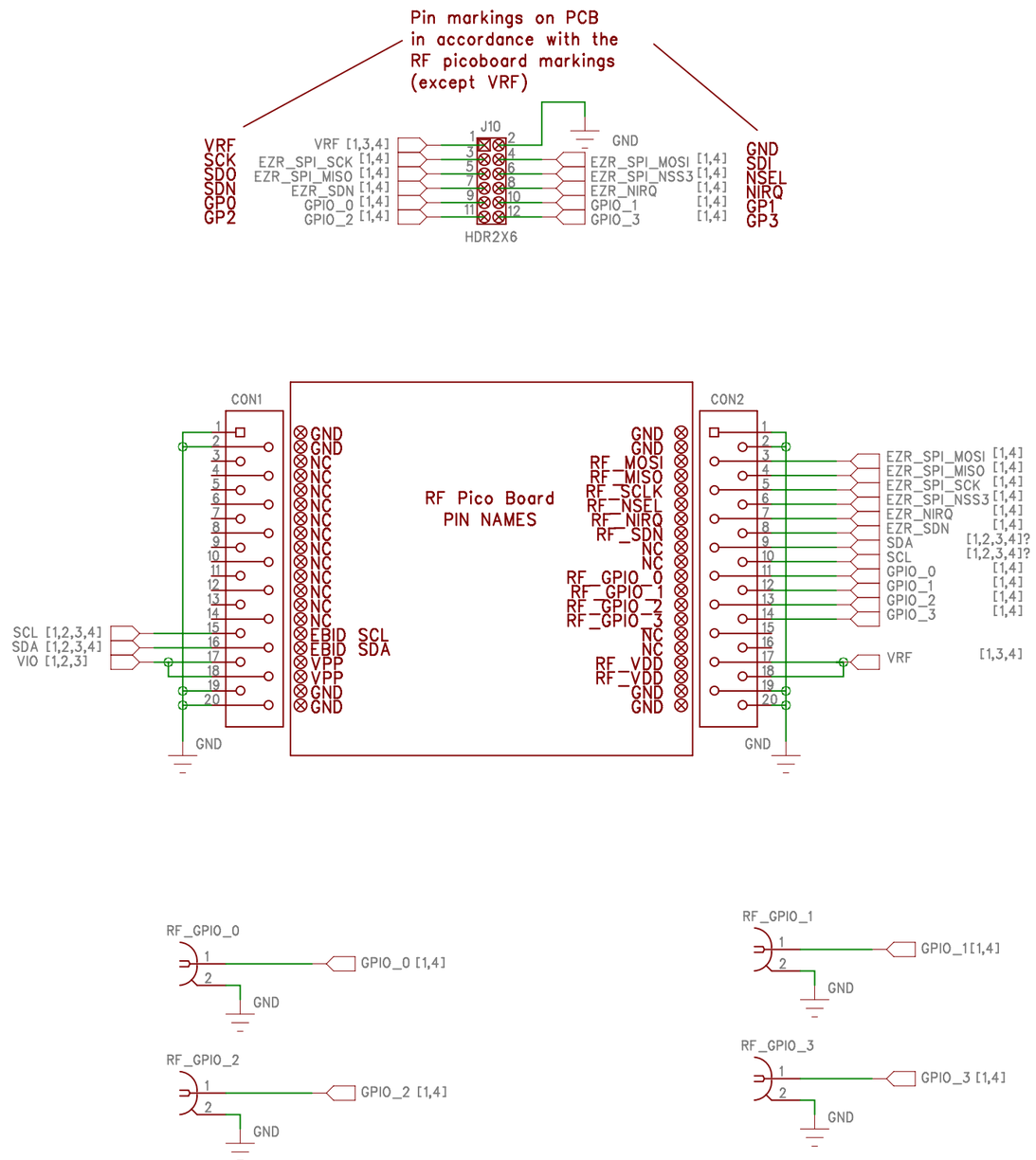

SILICON LABORATORIES

TITLE: MSC-WMB912 Wireless Motherboard			
SCHEMATIC VERSION: WES0001-04-WMB912-03			
DATE: Jun/11/2014	SIZE: B	SHEET: 4 OF 4	