Primary configuration: Default connections with populated OR resistors
Secondary configuration: No Pop Resistors for optional connections

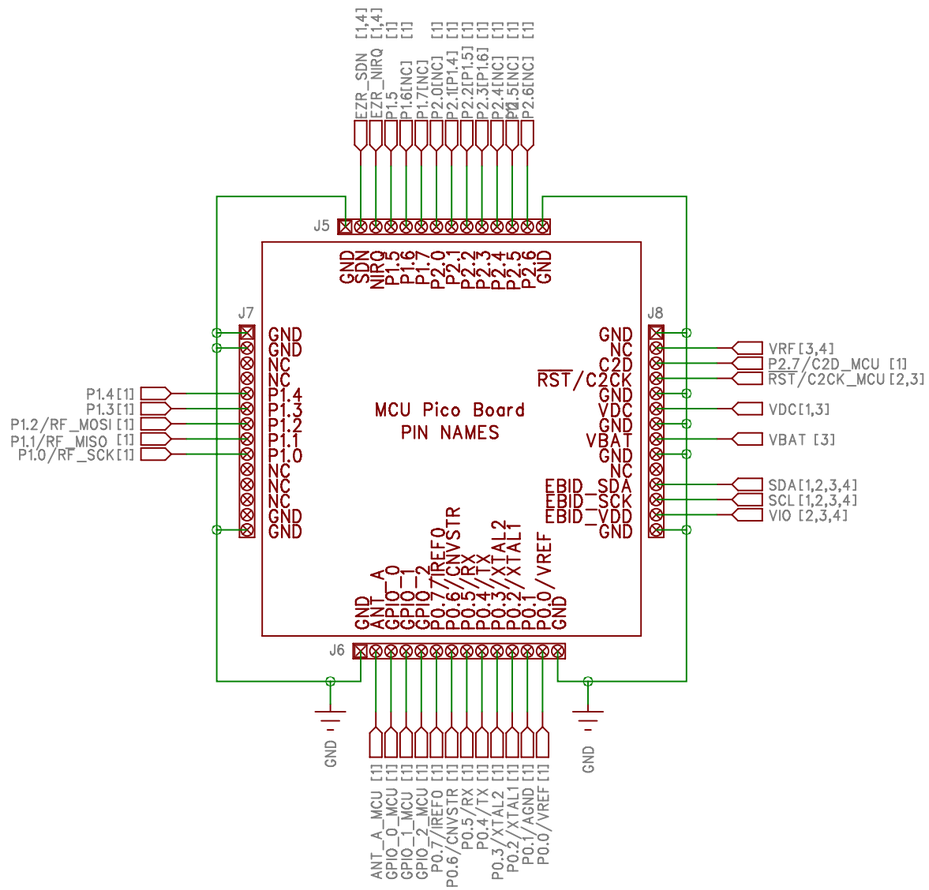

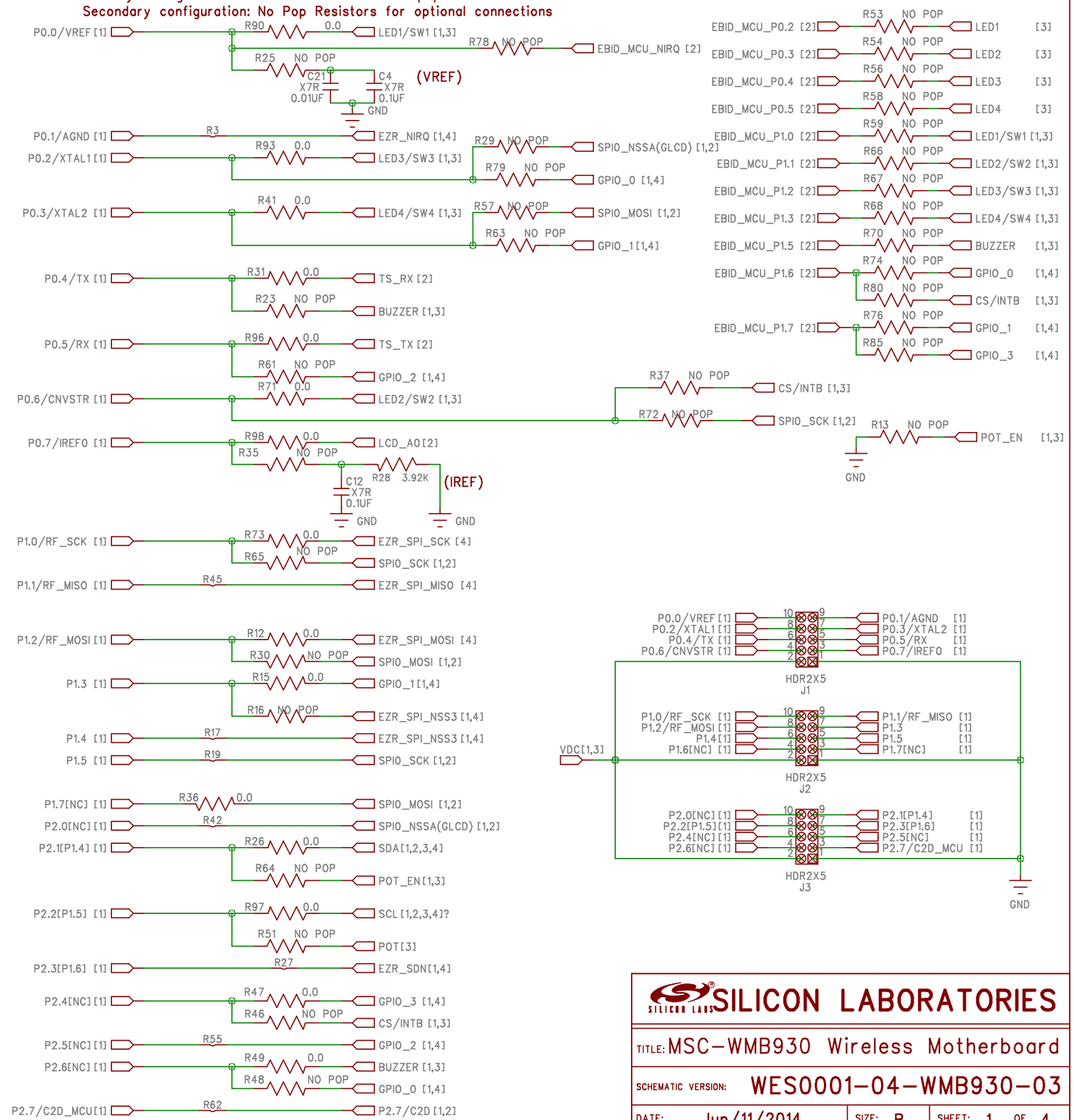

SILICON LABORATORIES

TITLE: MSC-WMB930 Wireless Motherboard			
SCHEMATIC VERSION: WES0001-04-WMB930-03			
DATE: Jun/11/2014	SIZE: B	SHEET: 1 OF 4	

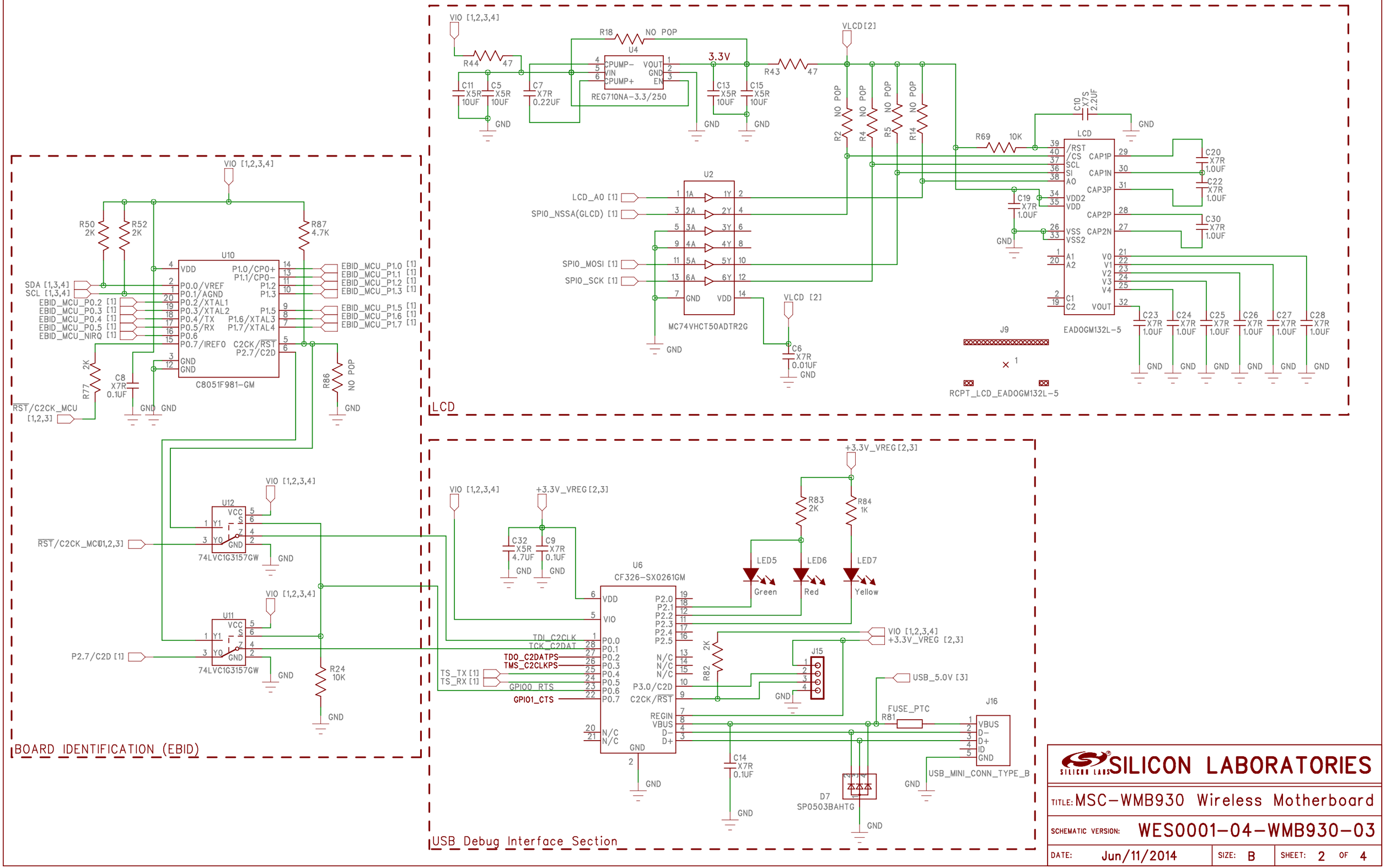

SILICON LABORATORIES

TITLE: MSC-WMB930 Wireless Motherboard

SCHEMATIC VERSION: WES0001-04-WMB930-03

DATE: Jun/11/2014 | SIZE: B | SHEET: 2 OF 4

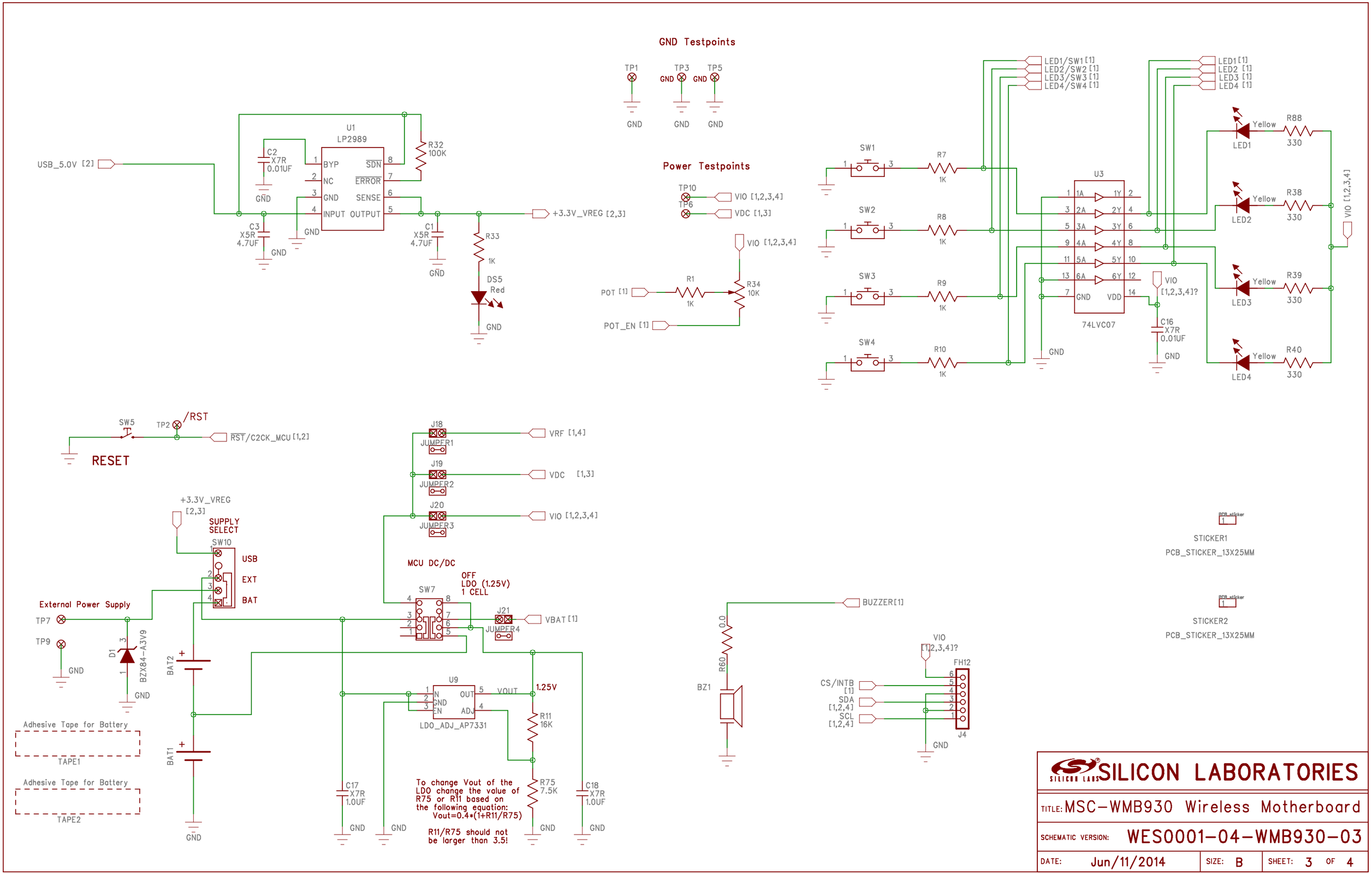

SILICON LABORATORIES

TITLE: MSC-WMB930 Wireless Motherboard

SCHEMATIC VERSION: WES0001-04-WMB930-03

DATE: Jun/11/2014 | SIZE: B | SHEET: 3 OF 4

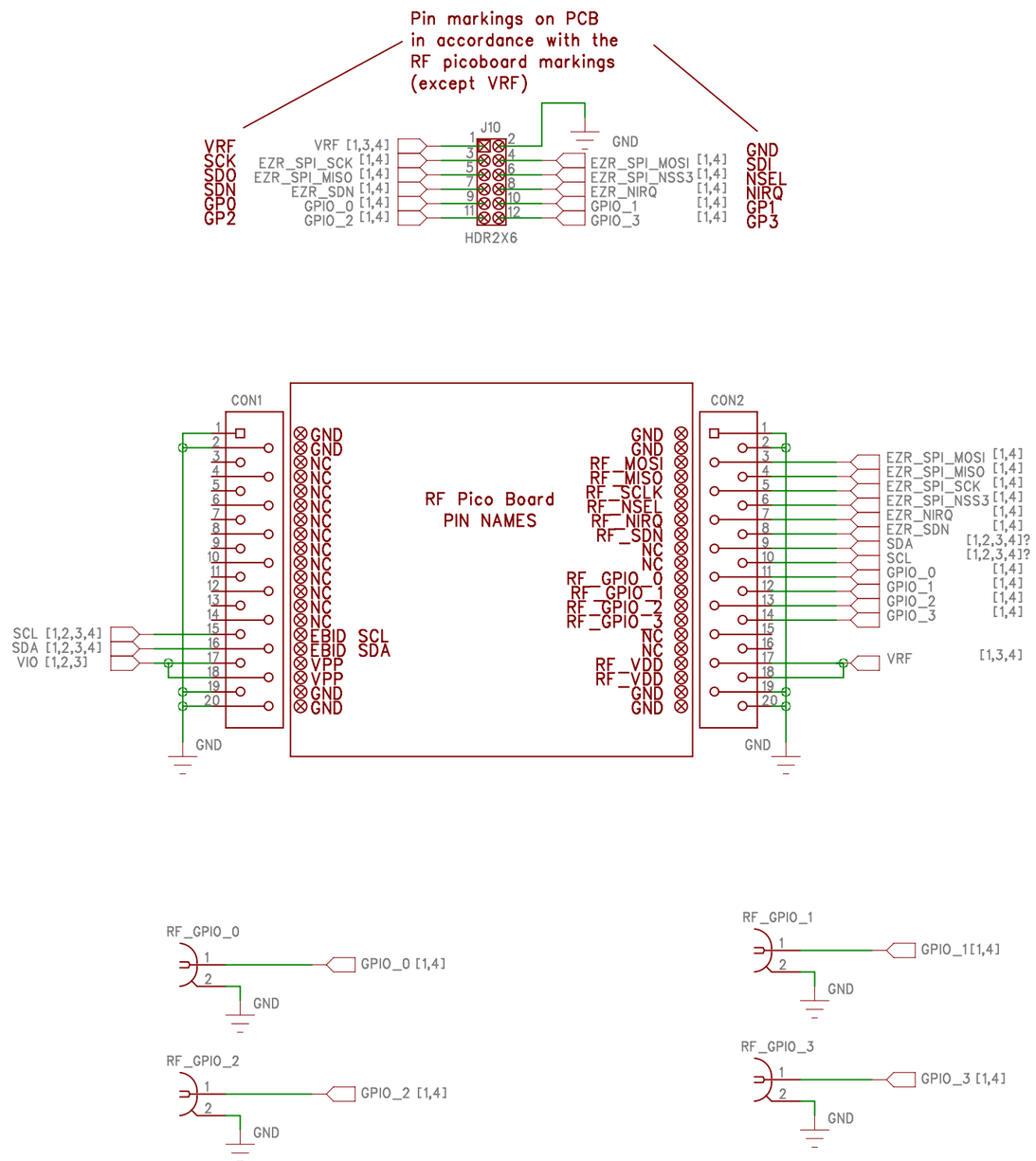

SILICON LABORATORIES

TITLE:	MSC-WMB930 Wireless Motherboard
SCHEMATIC VERSION:	WES0001-04-WMB930-03
DATE: Jun/11/2014	SIZE: B — SHEET: 4 OF 4