ZGM130S Radio Board

Board Function	Page
Title Page	1
RF, Antenna and Power	2
I/O Port Connections	3
WSTK Connectors & Board ID	4

Revision History

Rev.	Description
A00	Initial release.

Designed: TAB	Approved: JSH	Schematic Title: ZGM130S Radio Board
Size: A3	BOM Doc No:	Page Title: Title Page
Design Created Date: Monday, April 02, 2012		Document number: BRD4202A — Revision: A00
		Sheet Created Date: Monday, April 02, 2012 — Sheet Modified Date: Tuesday, October 23, 2018 — Sheet 1 of 4

Antenna & Radio Interface

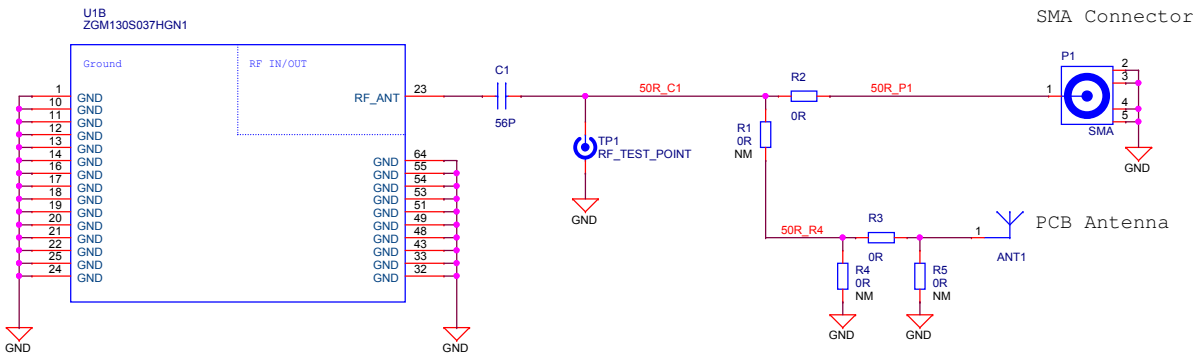

Power & Decoupling

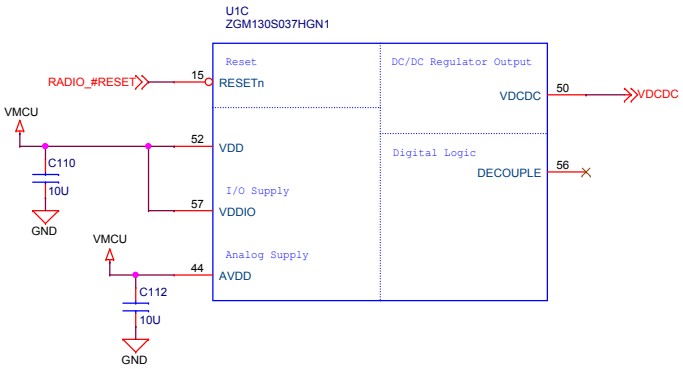

SILICON LABS	Schematic Title: **ZGM130S Radio Board**	
	Page Title: **RF, Antenna and Power**	
Designed: TAB / Approved: JSH	Document number: **BRD4202A**	Revision: A00
Size: A3 / BOM Doc No:		
Design Created Date: Monday, April 02, 2012	Sheet Created Date: Monday, April 02, 2012 / Sheet Modified Date: Tuesday, October 23, 2018	Sheet 2 of 4

Pin Mapping

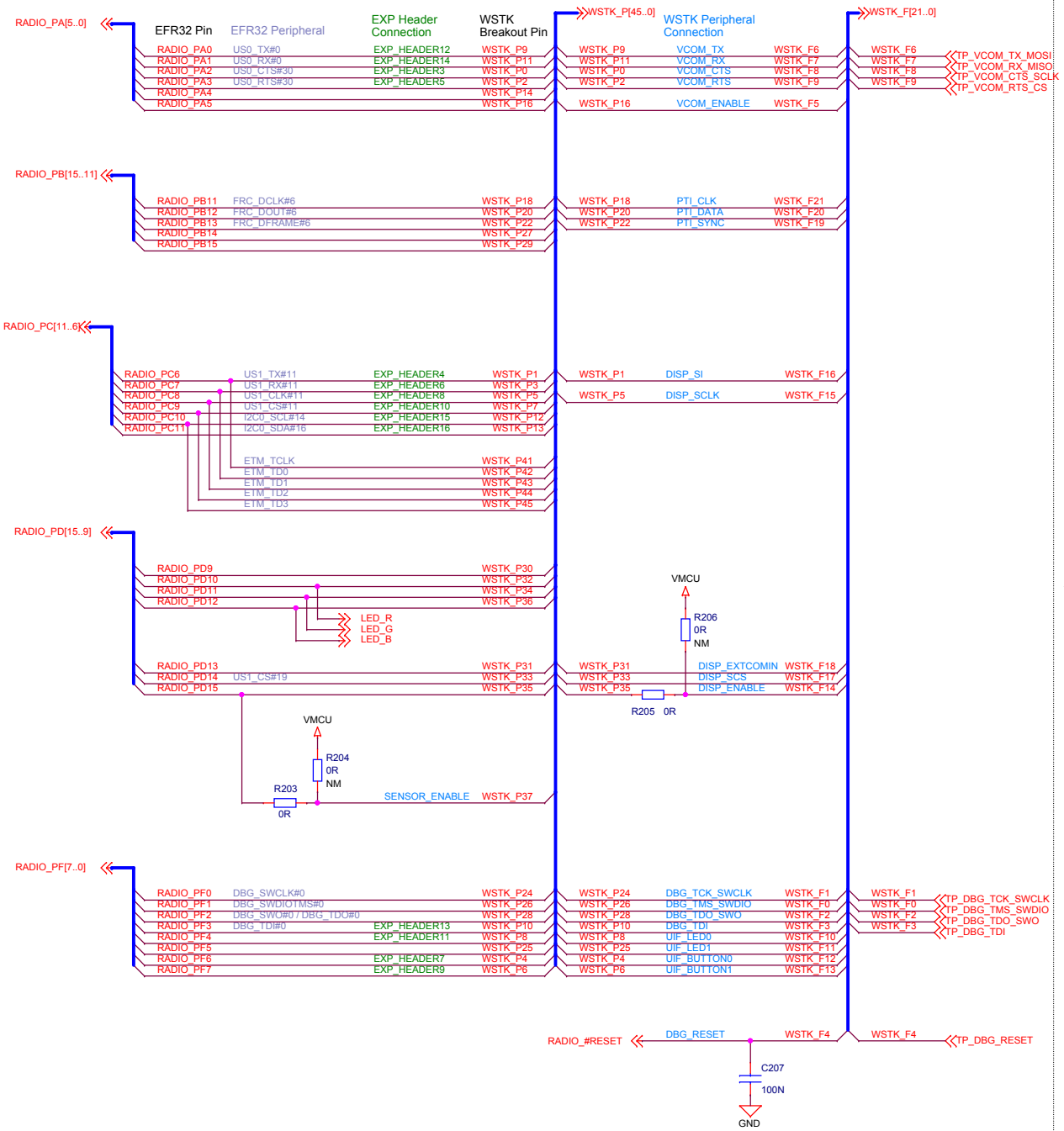

I/O Port Pins

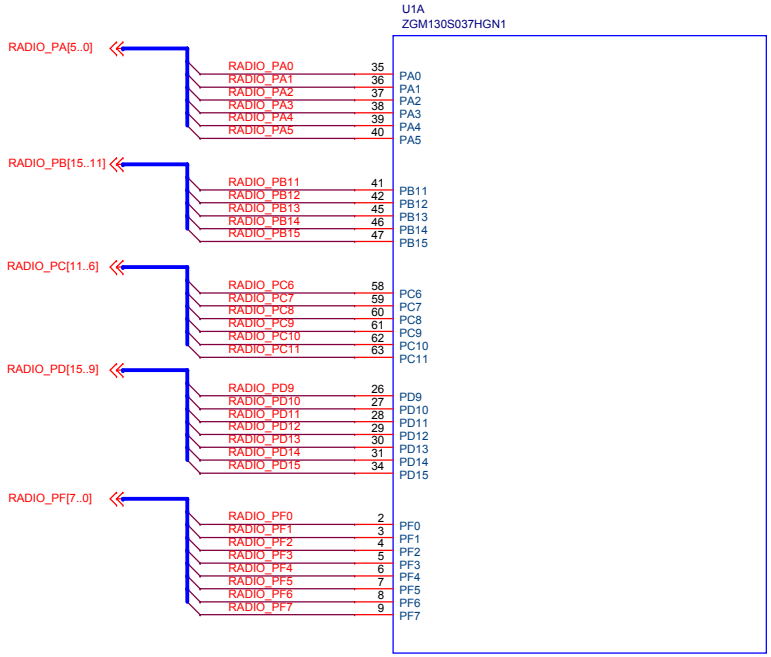

RGB LED

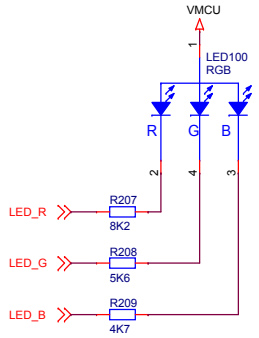

SILICON LABS

Schematic Title	ZGM130S Radio Board
Page Title	I/O Port Connections
Designed: TAB	Approved: JSH
Size A3	BOM Doc No:
Document number	BRD4202A
Revision	A00
Design Created Date:	Monday, April 02, 2012
Sheet Created Date	Wednesday, April 11, 2012
Sheet Modified Date	Tuesday, October 23, 2018
Sheet	3 of 4

WSTK Connectors

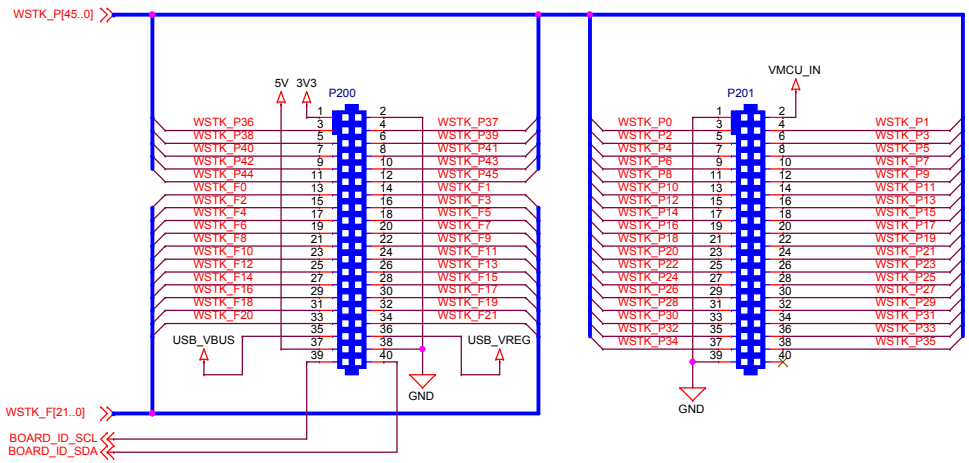

WSTK Power Decoupling

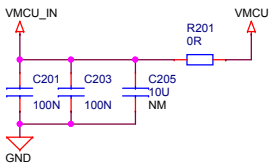

Board Identification

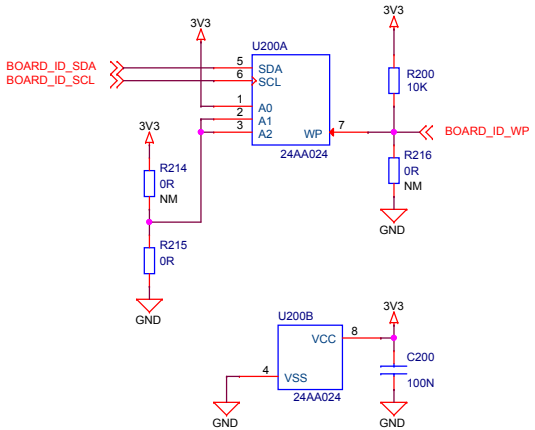

Test Points

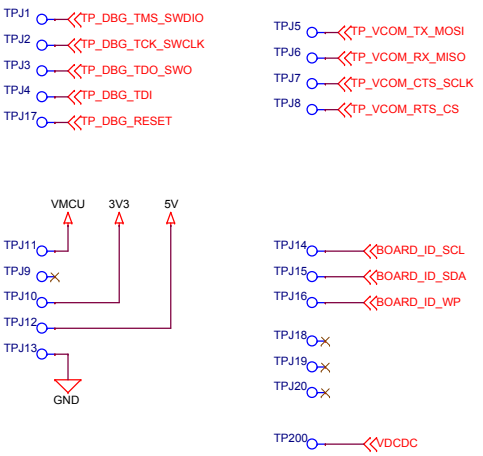

SILICON LABS

Designed: TAB	Approved: JSH
Size A3	BOM Doc No:
Design Created Date: Monday, April 02, 2012	

Schematic Title
ZGM130S Radio Board

Page Title
WSTK Connectors and Board ID

Document number **BRD4202A**		Revision A00
Sheet Created Date Tuesday, April 03, 2012	Sheet Modified Date Tuesday, October 23, 2018	Sheet 4 of 4