Si52258-D01-AM PCIe Clock Generator

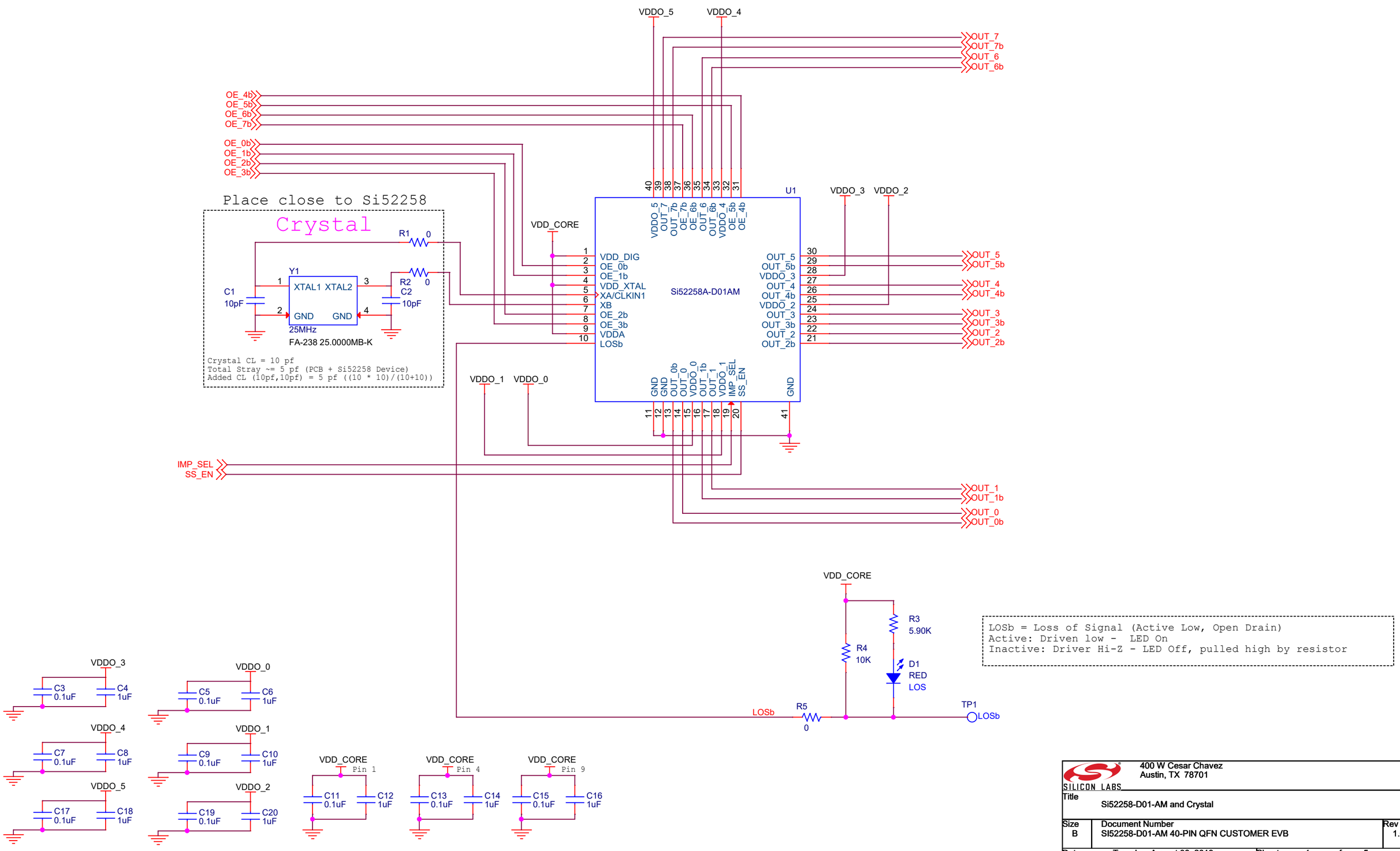

SILICON LABS
400 W Cesar Chavez
Austin, TX 78701

Title	Si52258-D01-AM and Crystal
Size B	Document Number SI52258-D01-AM 40-PIN QFN CUSTOMER EVB
Rev	1.0
Date:	Tuesday, August 06, 2019
Sheet	1 of 5

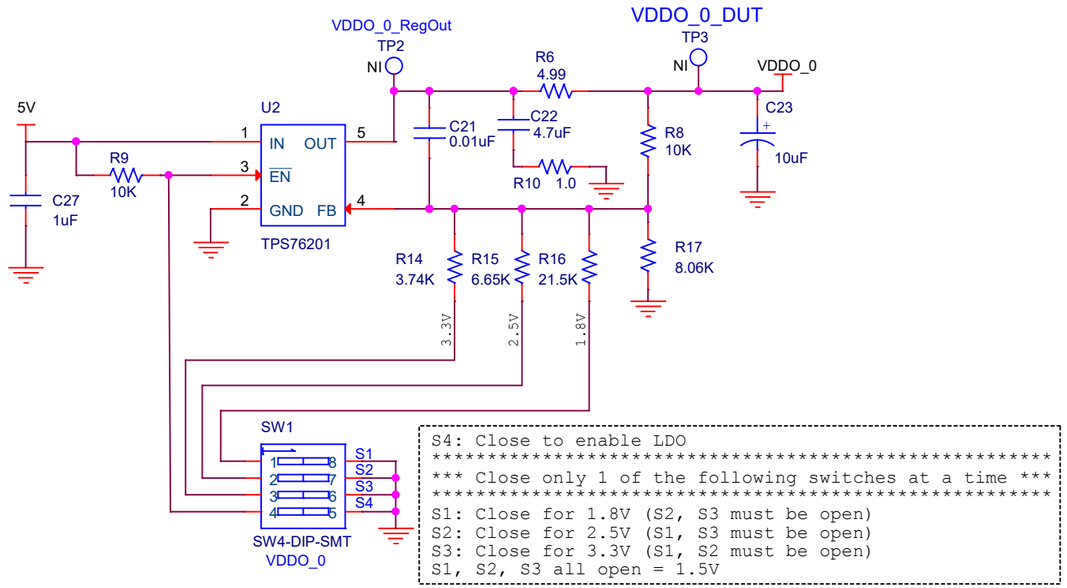

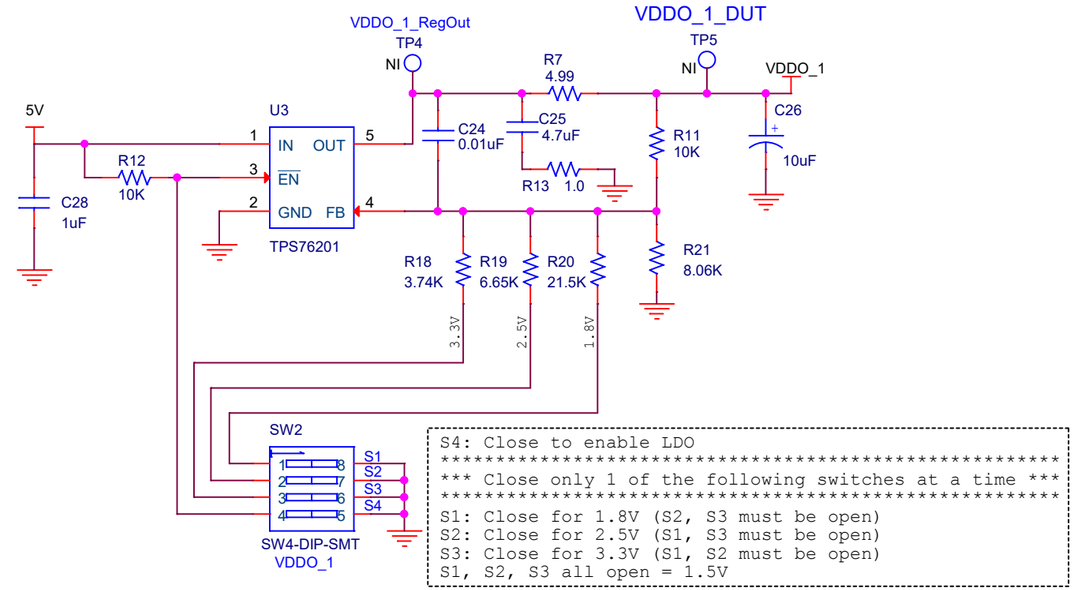

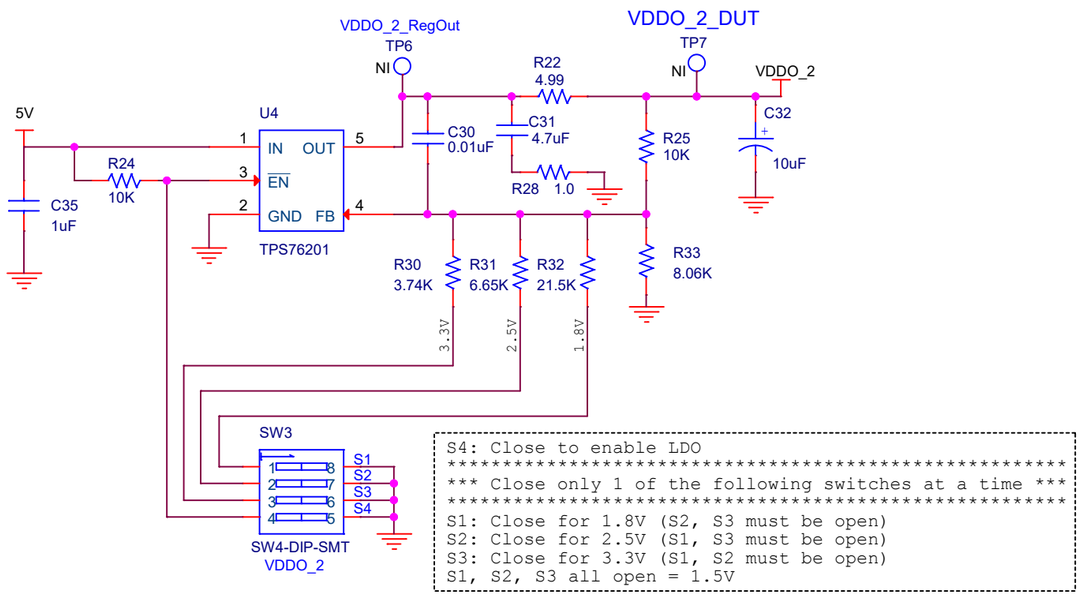

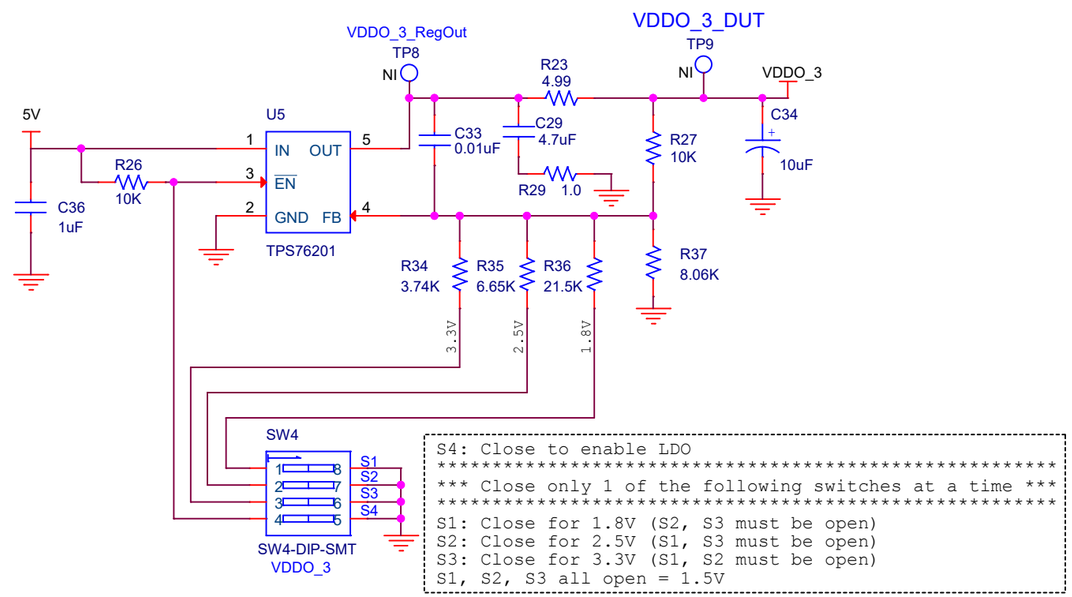

SILICON LABS
400 W Cesar Chavez
Austin, TX 78701

Title: Voltage Regulators (1 of 2)

Size	Document Number	Rev
B	SI52258-D01-AM 40-PIN QFN CUSTOMER EVB	1.0

Date: Tuesday, August 06, 2019 Sheet 2 of 5

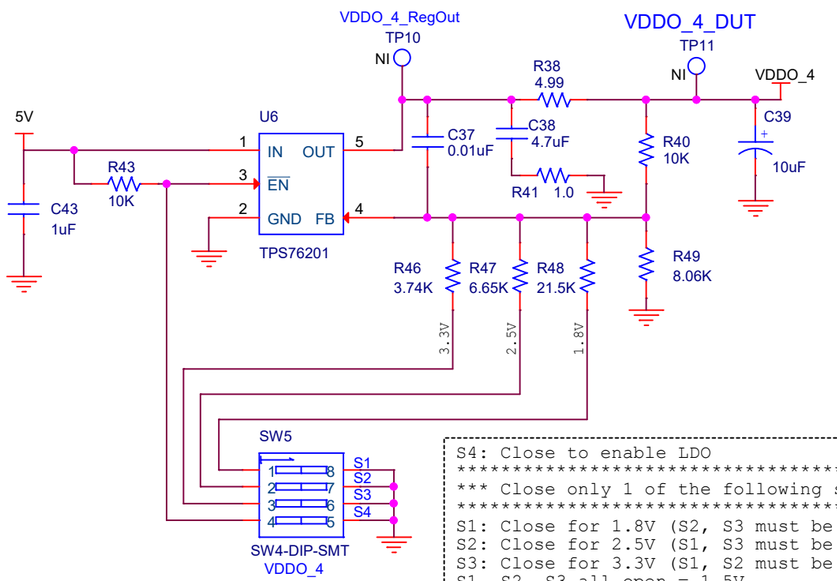


```
S4: Close to enable LDO
*******************************************************
*** Close only 1 of the following switches at a time ***
*******************************************************
S1: Close for 1.8V (S2, S3 must be open)
S2: Close for 2.5V (S1, S3 must be open)
S3: Close for 3.3V (S1, S2 must be open)
S1, S2, S3 all open = 1.5V
```

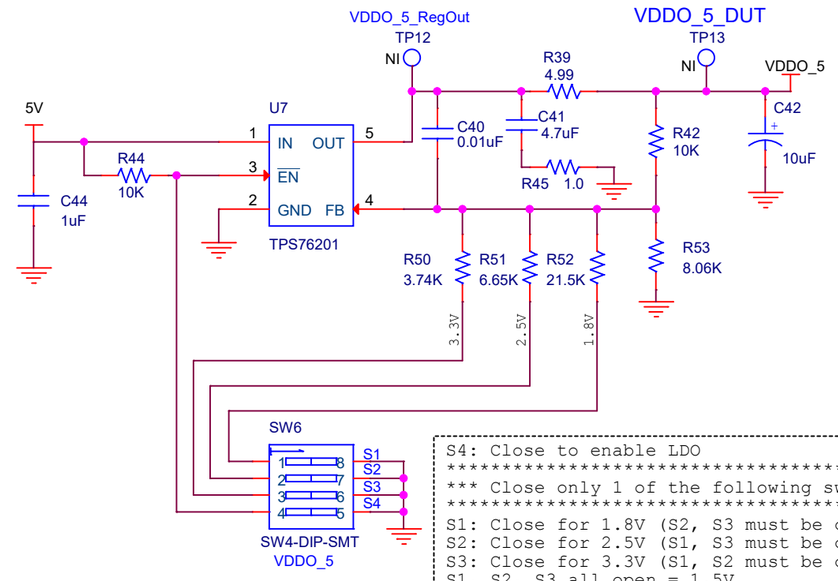


```
S4: Close to enable LDO
*******************************************************
*** Close only 1 of the following switches at a time ***
*******************************************************
S1: Close for 1.8V (S2, S3 must be open)
S2: Close for 2.5V (S1, S3 must be open)
S3: Close for 3.3V (S1, S2 must be open)
S1, S2, S3 all open = 1.5V
```

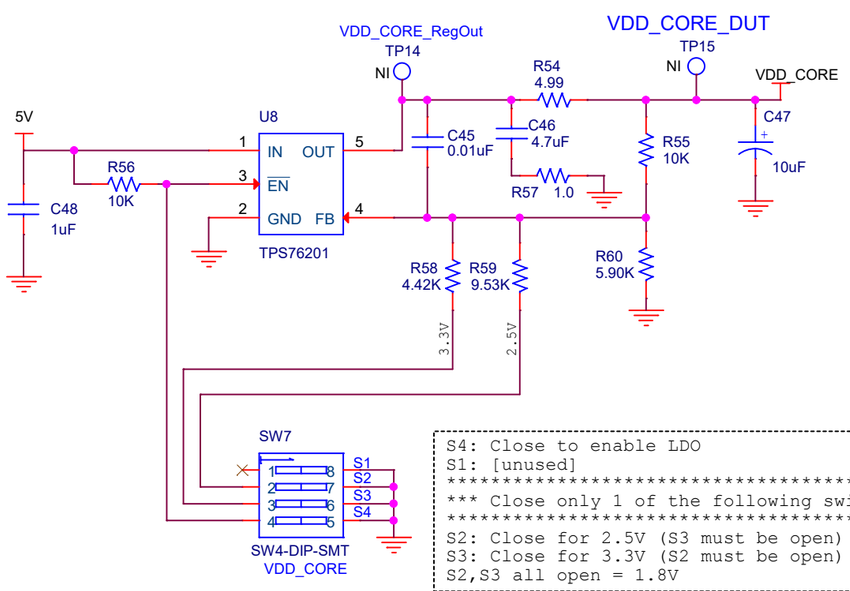


```
S4: Close to enable LDO
S1: [unused]
*******************************************************
*** Close only 1 of the following switches at a time ***
*******************************************************
S2: Close for 2.5V (S3 must be open)
S3: Close for 3.3V (S2 must be open)
S2,S3 all open = 1.8V
```


SILICON LABS
400 W Cesar Chavez
Austin, TX 78701

Title	Voltage Regulators (2 of 2)	
Size B	Document Number SI52258-D01-AM 40-PIN QFN CUSTOMER EVB	Rev 1.0
Date: Tuesday, August 06, 2019	Sheet 3 of 5	

Clock Outputs

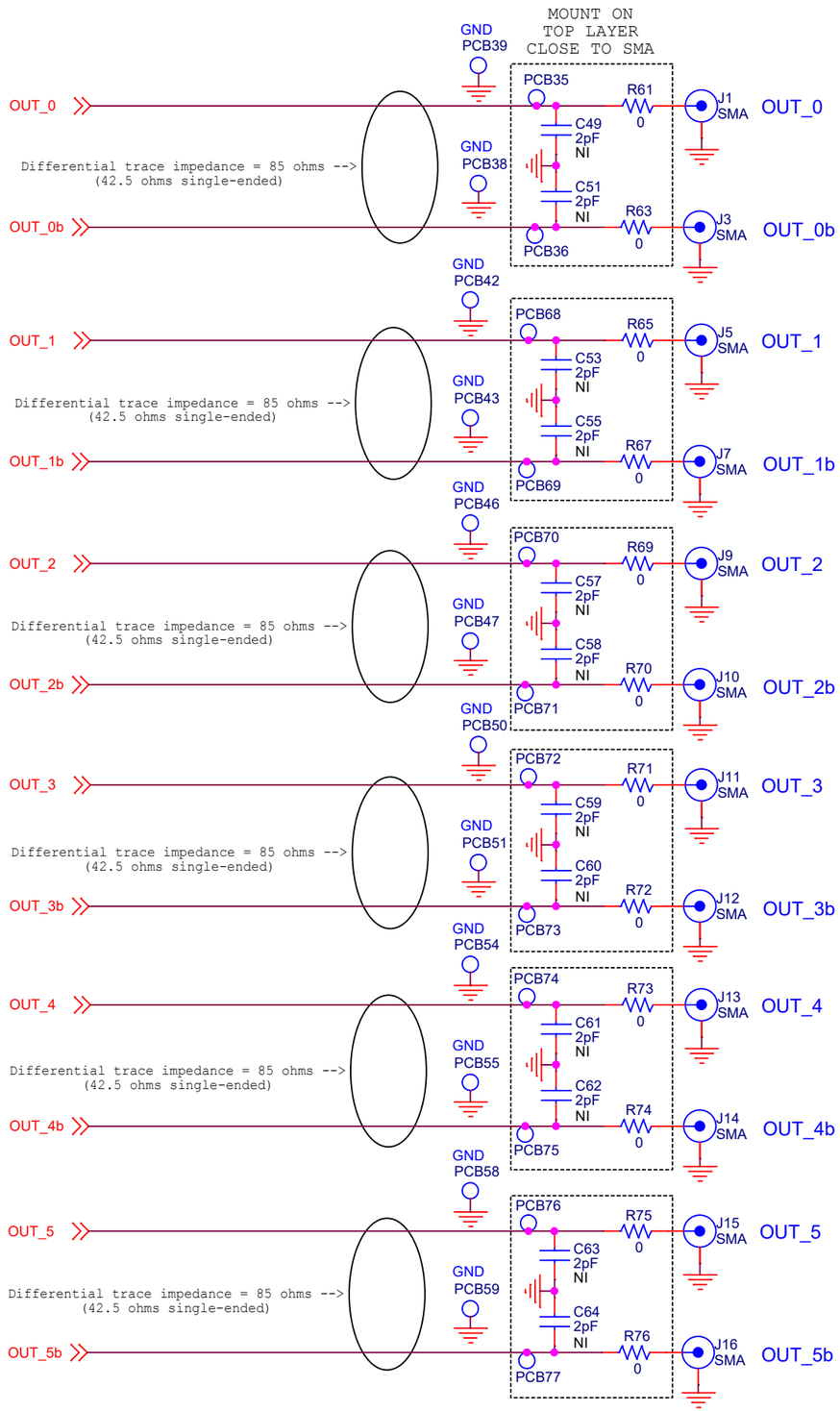

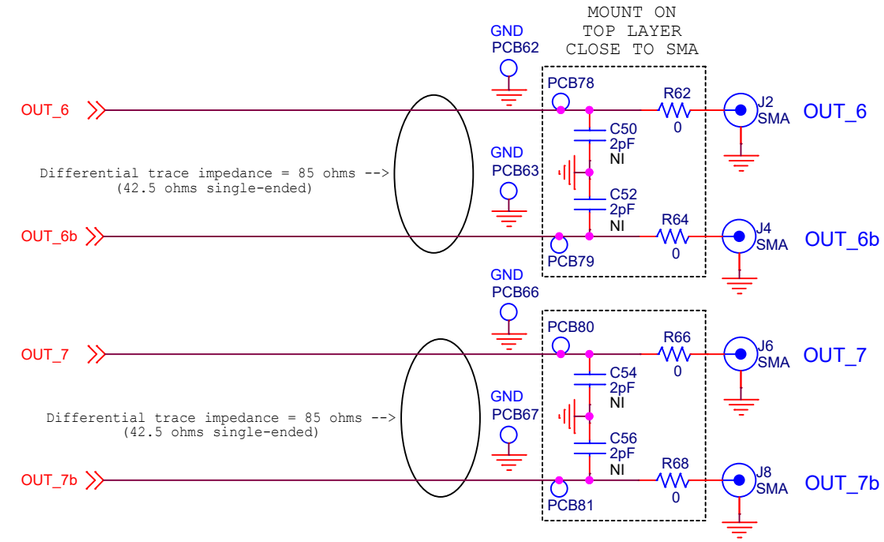

Output Termination Note:
Components can be replaced as needed to create desired termination scheme. For example, the 0 ohm resistors can be replaced with 0.1uF caps if AC coupling is desired.

See Si52258 EVB User's Manual for more information.

SILICON LABS
400 W Cesar Chavez
Austin, TX 78701

Title	Clock Outputs	
Size B	Document Number SI52258-D01-AM 40-PIN QFN CUSTOMER EVB	Rev 1.0
Date: Tuesday, August 06, 2019	Sheet 4 of 5	

Device Function Selects

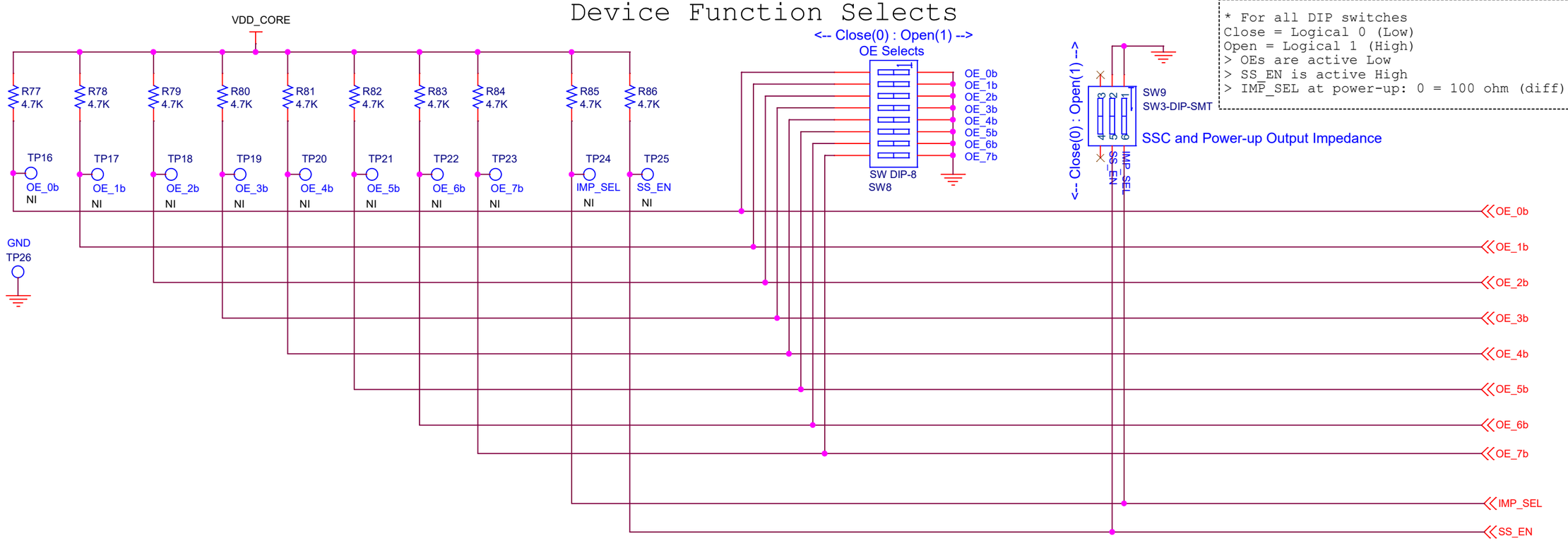

* For all DIP switches
Close = Logical 0 (Low)
Open = Logical 1 (High)
> OEs are active Low
> SS_EN is active High
> IMP_SEL at power-up: 0 = 100 ohm (diff), 1 = 85 ohm (diff)

EVB Power

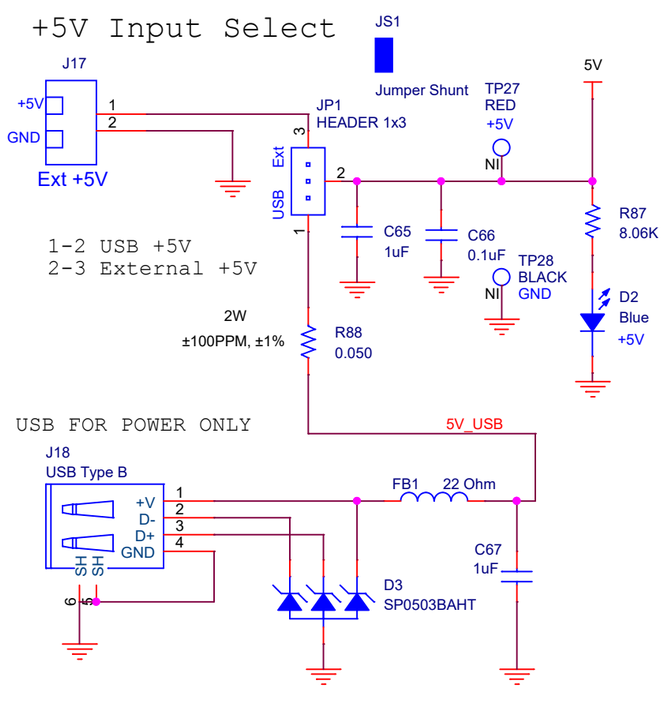

SILICON LABS	400 W Cesar Chavez Austin, TX 78701	
Title	Funtion Selects and EVB Power	
Size B	Document Number SI52258-D01-AM 40-PIN QFN CUSTOMER EVB	Rev 1.0
Date: Tuesday, August 06, 2019	Sheet 5 of 5	