Input Clocks & Crystal

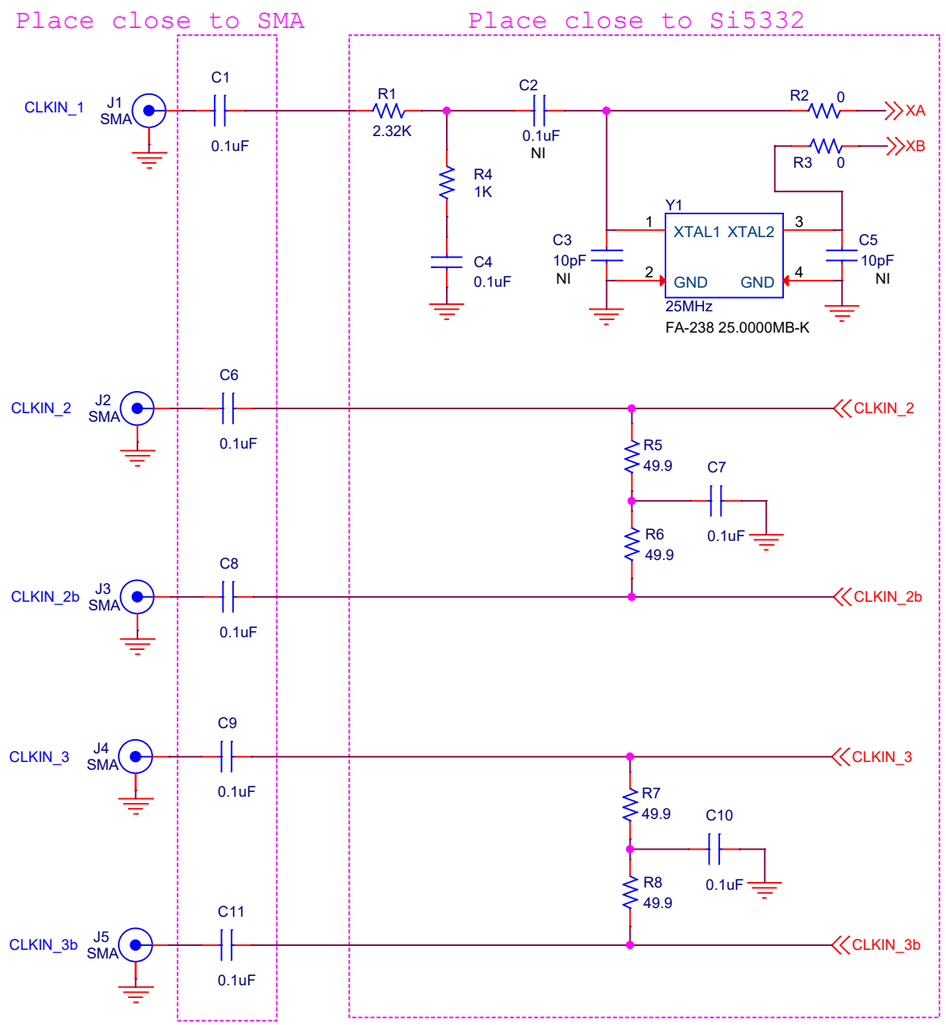

Si5332-AM2

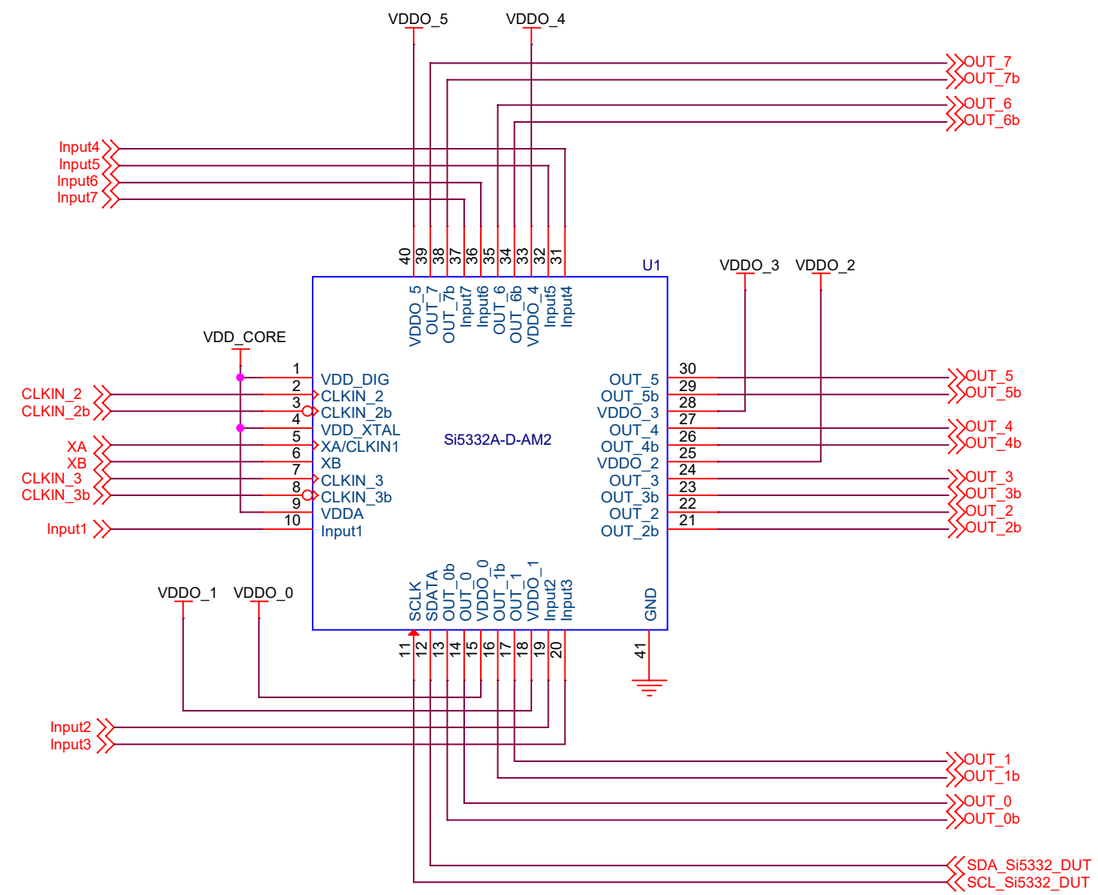

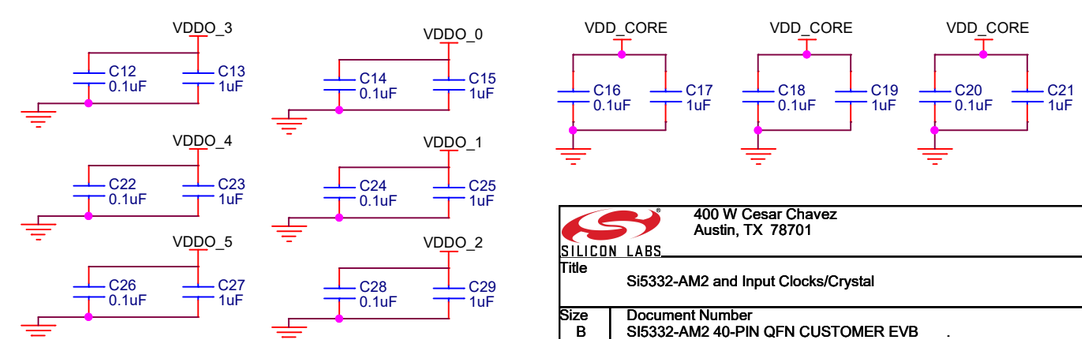

SILICON LABS
400 W Cesar Chavez
Austin, TX 78701

Title: Si5332-AM2 and Input Clocks/Crystal

Size	Document Number	Rev
B	SI5332-AM2 40-PIN QFN CUSTOMER EVB .	1.0

Date: Tuesday, August 06, 2019 Sheet 1 of 8

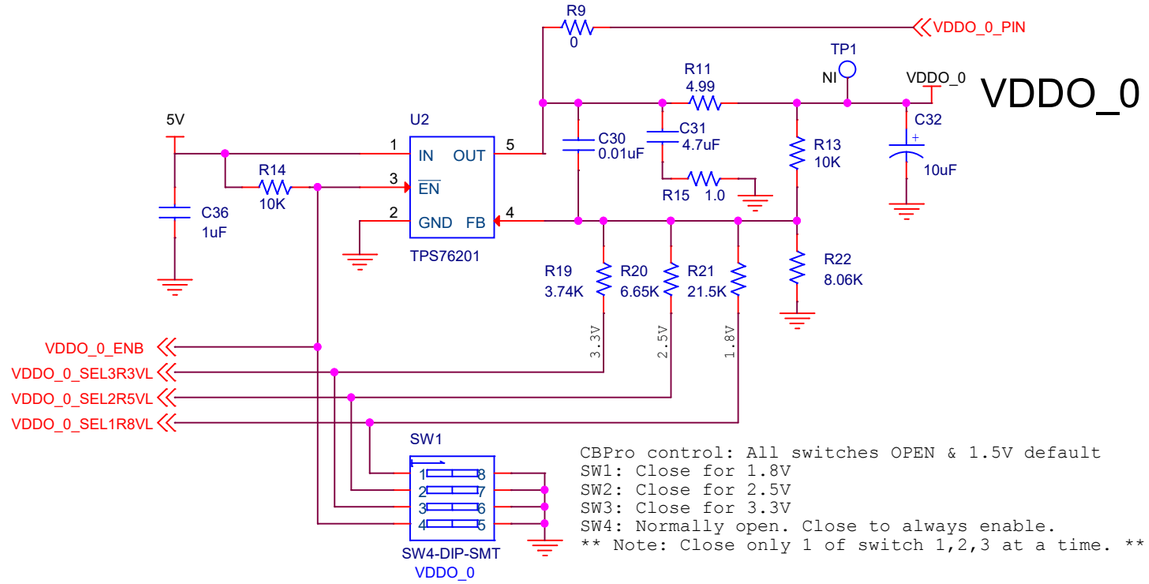

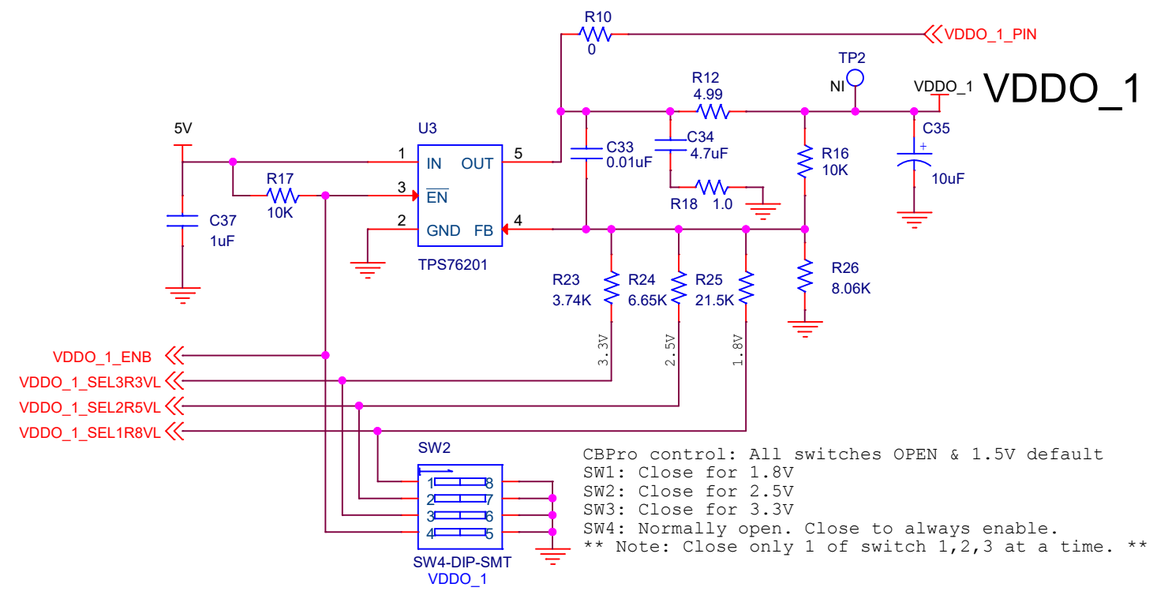

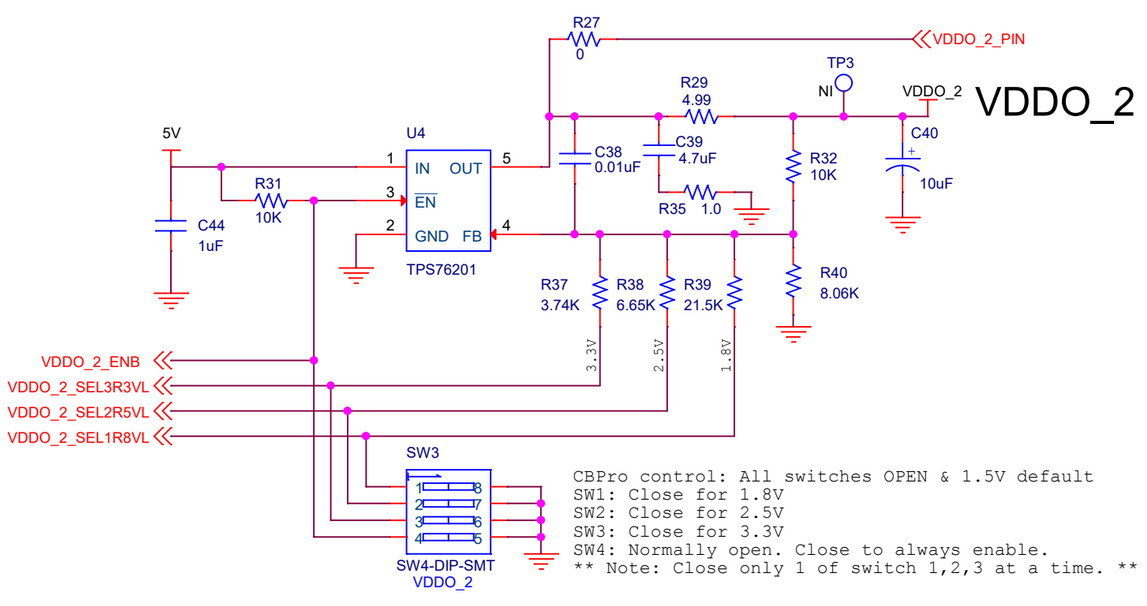

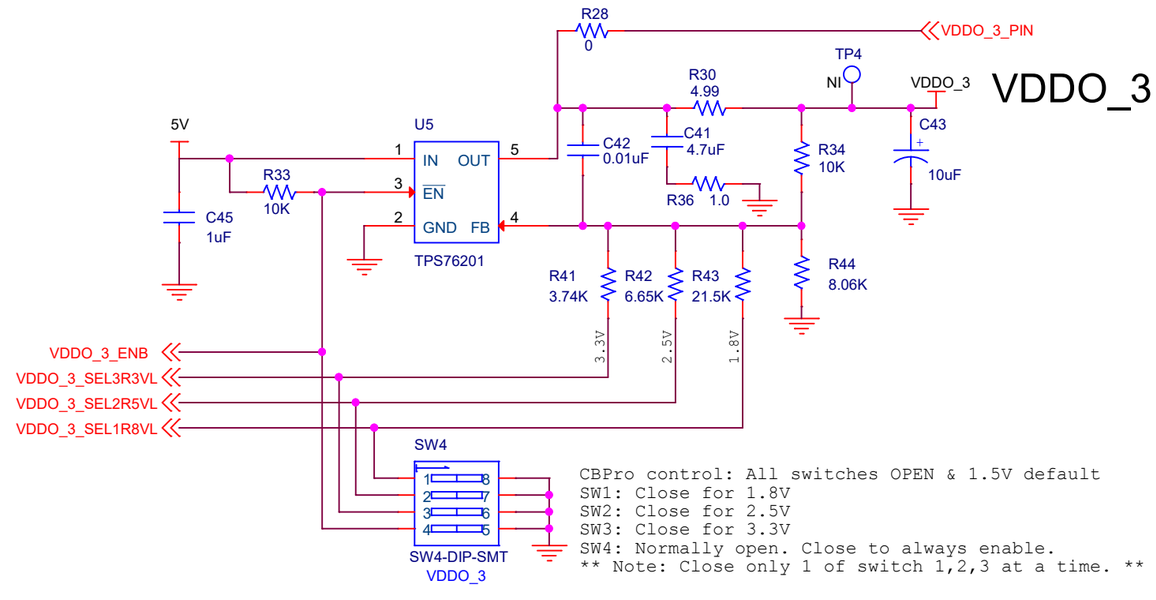

SILICON LABS
400 W Cesar Chavez
Austin, TX 78701

Title: Voltage Regulators (1 of 2)

Size	Document Number	Rev
B	SI5332-AM2 40-PIN QFN CUSTOMER EVB .	1.0

Date: Tuesday, August 06, 2019 Sheet 2 of 8

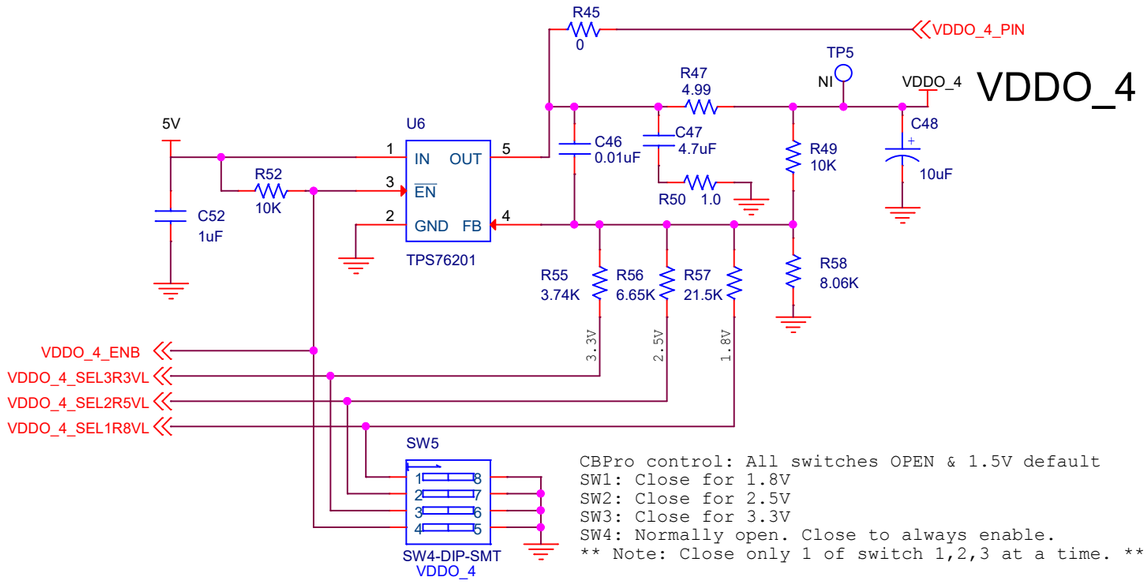

CBPro control: All switches OPEN & 1.5V default
SW1: Close for 1.8V
SW2: Close for 2.5V
SW3: Close for 3.3V
SW4: Normally open. Close to always enable.
** Note: Close only 1 of switch 1,2,3 at a time. **

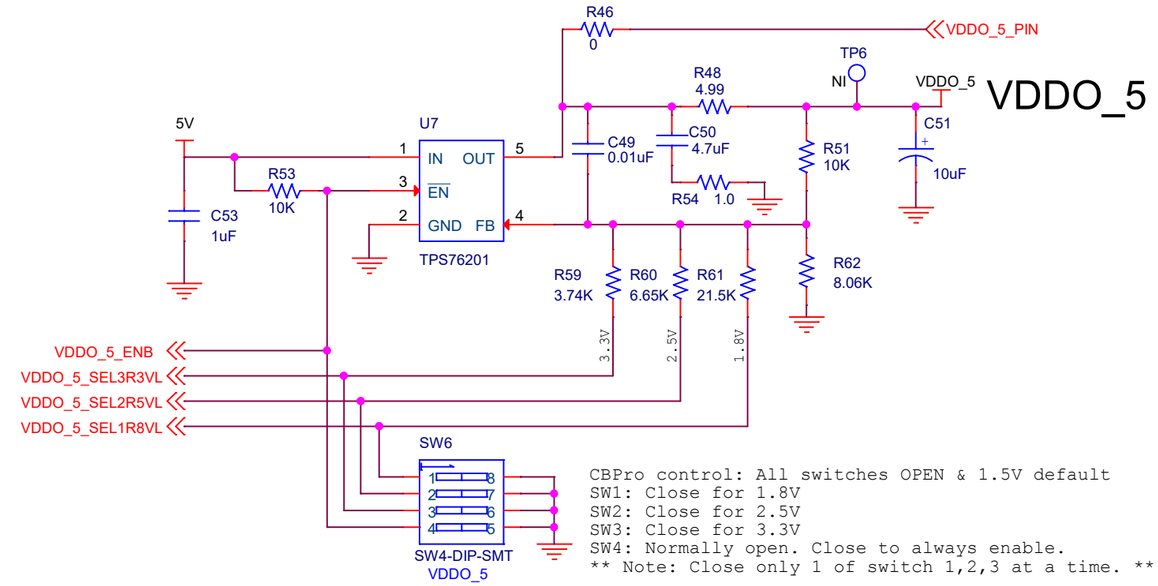

CBPro control: All switches OPEN & 1.5V default
SW1: Close for 1.8V
SW2: Close for 2.5V
SW3: Close for 3.3V
SW4: Normally open. Close to always enable.
** Note: Close only 1 of switch 1,2,3 at a time. **

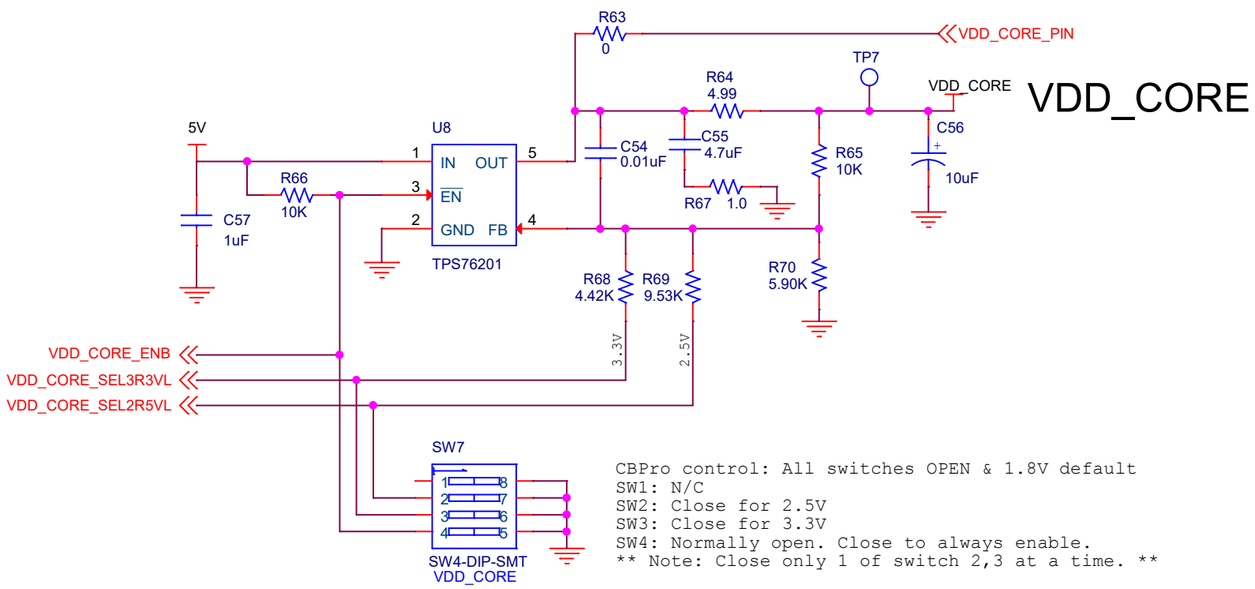

CBPro control: All switches OPEN & 1.8V default
SW1: N/C
SW2: Close for 2.5V
SW3: Close for 3.3V
SW4: Normally open. Close to always enable.
** Note: Close only 1 of switch 2,3 at a time. **

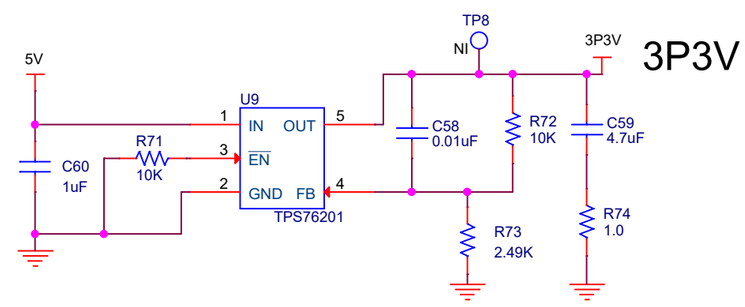

Fixed 3.3V - MCU & Misc.

SILICON LABS	400 W Cesar Chavez Austin, TX 78701	
Title	Voltage Regulators (2 of 2)	
Size B	Document Number SI5332-AM2 40-PIN QFN CUSTOMER EVB .	Rev 1.0
Date: Tuesday, August 06, 2019	Sheet 3 of 8	

Clock Outputs

Replace 0 ohm w/appropriate value series source termination as required (e.g. 25 ohm LVCMOS)

Install appropriate parallel source termination as required. (e.g. 50/42.5 ohm for Ext terminated HCSL.)

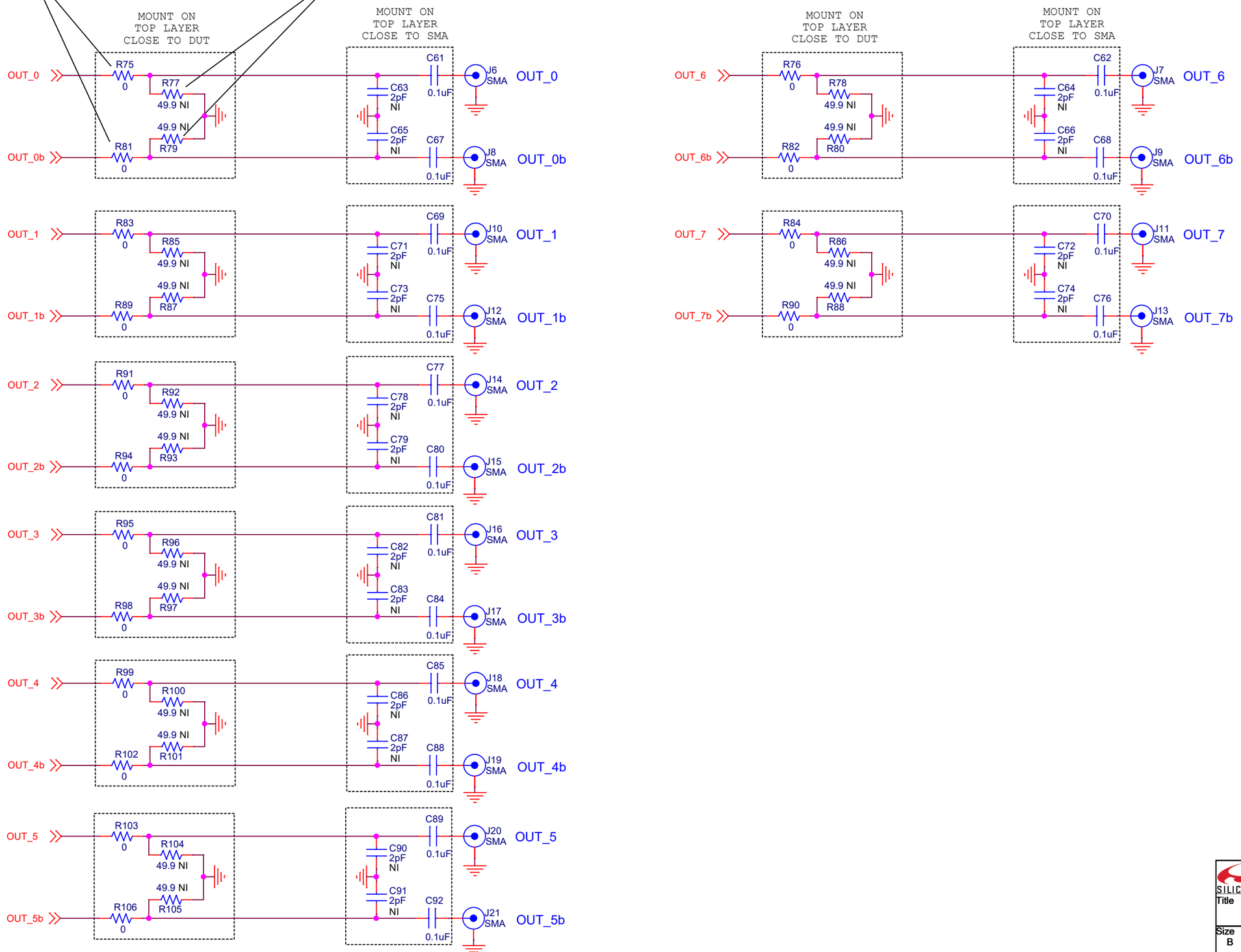

SILICON LABS
400 W Cesar Chavez
Austin, TX 78701

Title	Clock Outputs	
Size B	Document Number SI5332-AM2 40-PIN QFN CUSTOMER EVB .	Rev 1.0
Date: Tuesday, August 06, 2019	Sheet 4 of 8	

MCU Connections

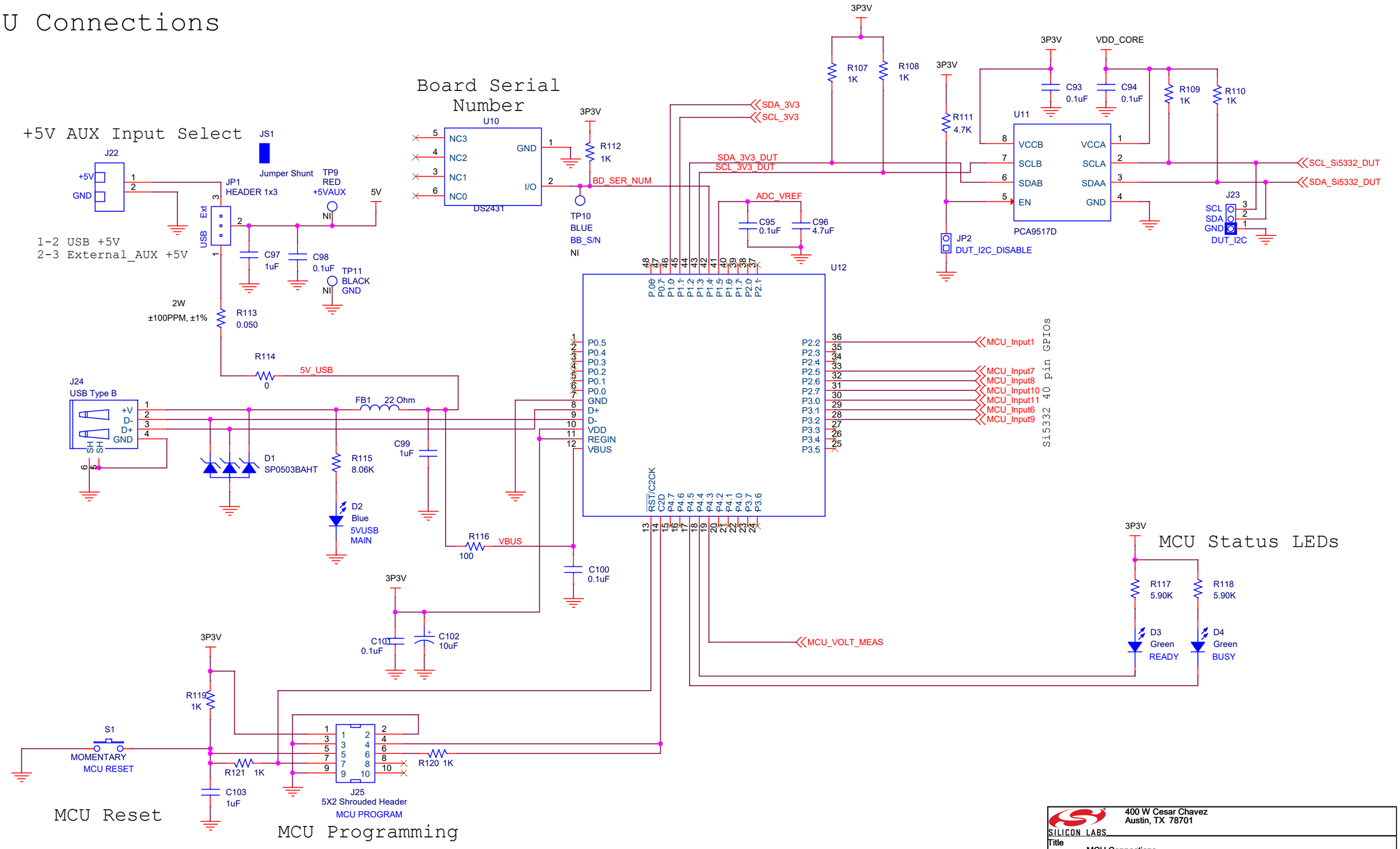

SILICON LABS	400 W Cesar Chavez Austin, TX 78701	
Title	MCU Connections	
Size B	Document Number SI5332-AM2 40-PIN QFN CUSTOMER EVB .	Rev 1.0
Date: Tuesday, August 06, 2019	Sheet 5 of 8	

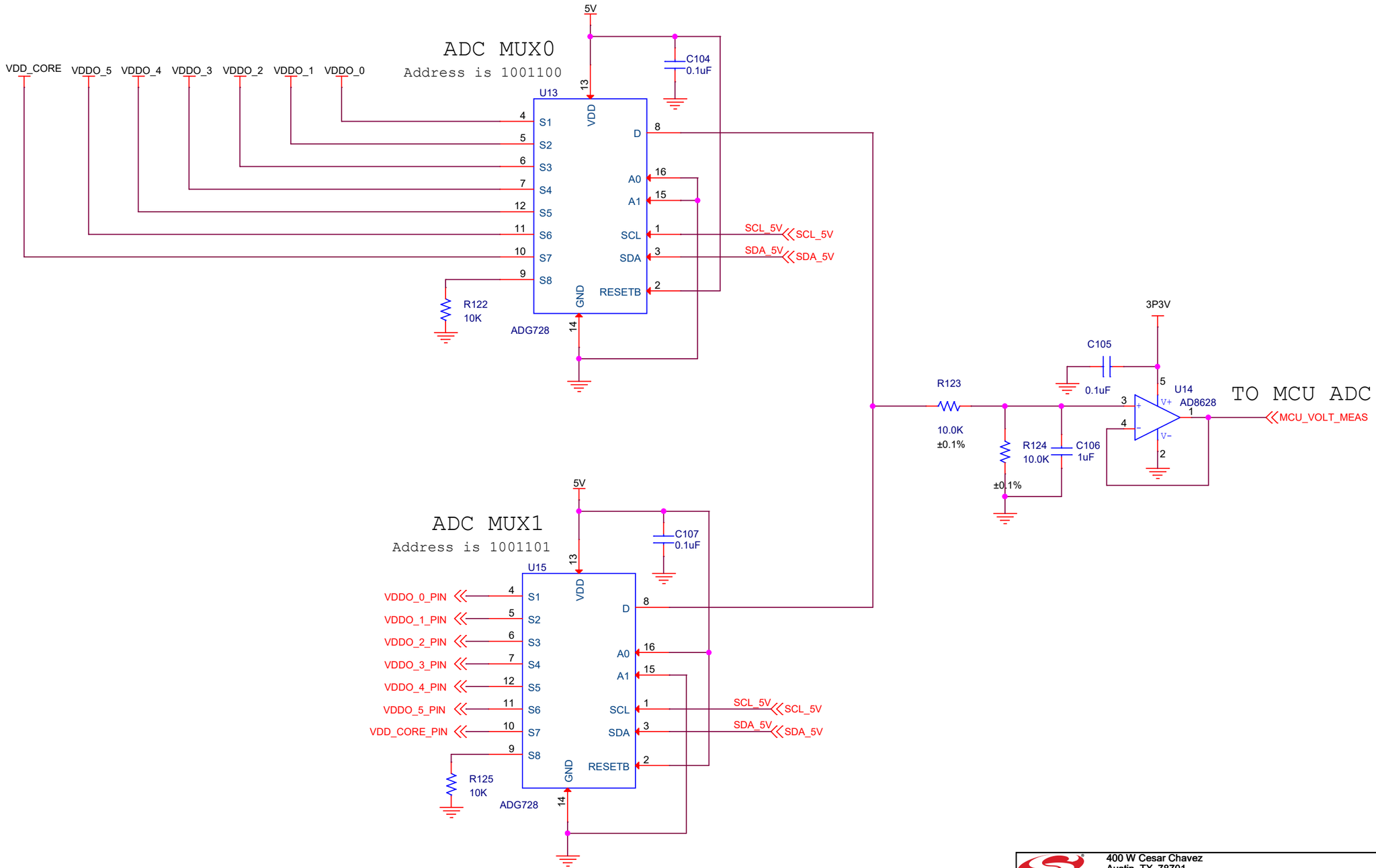

SILICON LABS
400 W Cesar Chavez
Austin, TX 78701

Title: Voltage Measurement

Size	Document Number	Rev
B	SI5332-AM2 40-PIN QFN CUSTOMER EVB .	1.0

Date: Tuesday, August 06, 2019 Sheet 6 of 8

I2C Accelerator

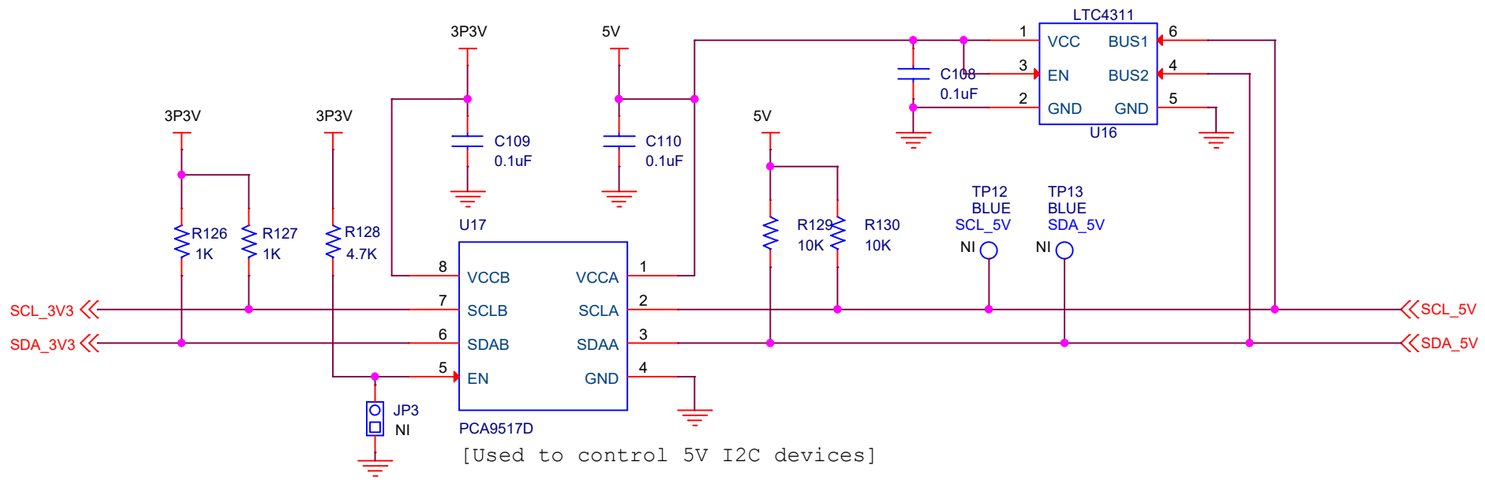

[Used to control 5V I2C devices]

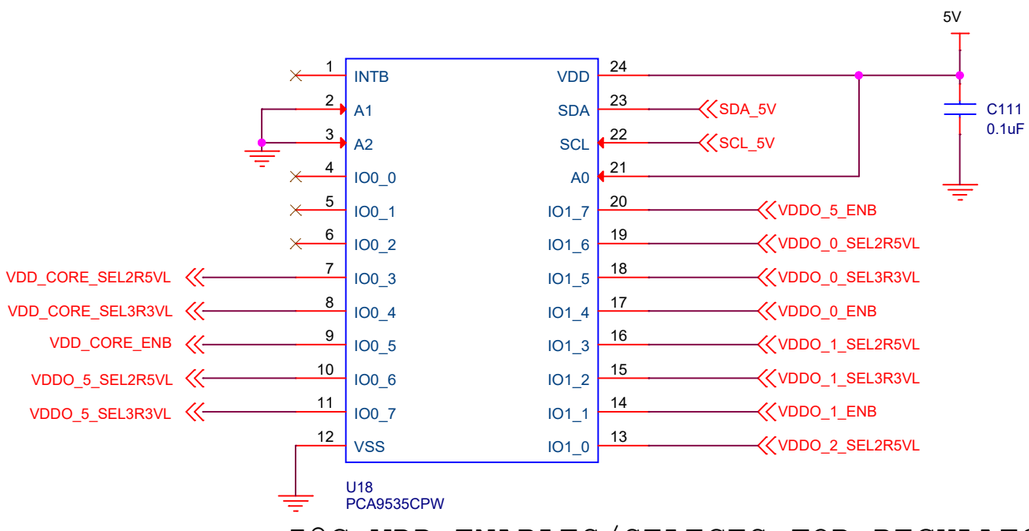

I2C VDD ENABLES/SELECTS FOR REGULATORS

I2C address: 0100000

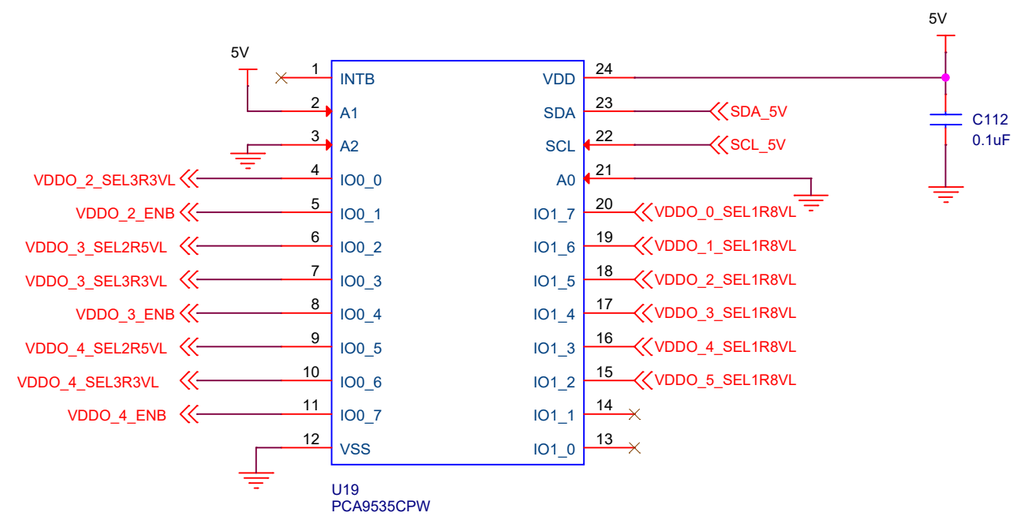

I2C VDD ENABLES/SELECTS FOR REGULATORS

I2C address: 0100010

SILICON LABS
400 W Cesar Chavez
Austin, TX 78701

Title	VDD Enables and 5V I2C	
Size B	Document Number SI5332-AM2 40-PIN QFN CUSTOMER EVB .	Rev 1.0
Date: Tuesday, August 06, 2019	Sheet 7 of 8	

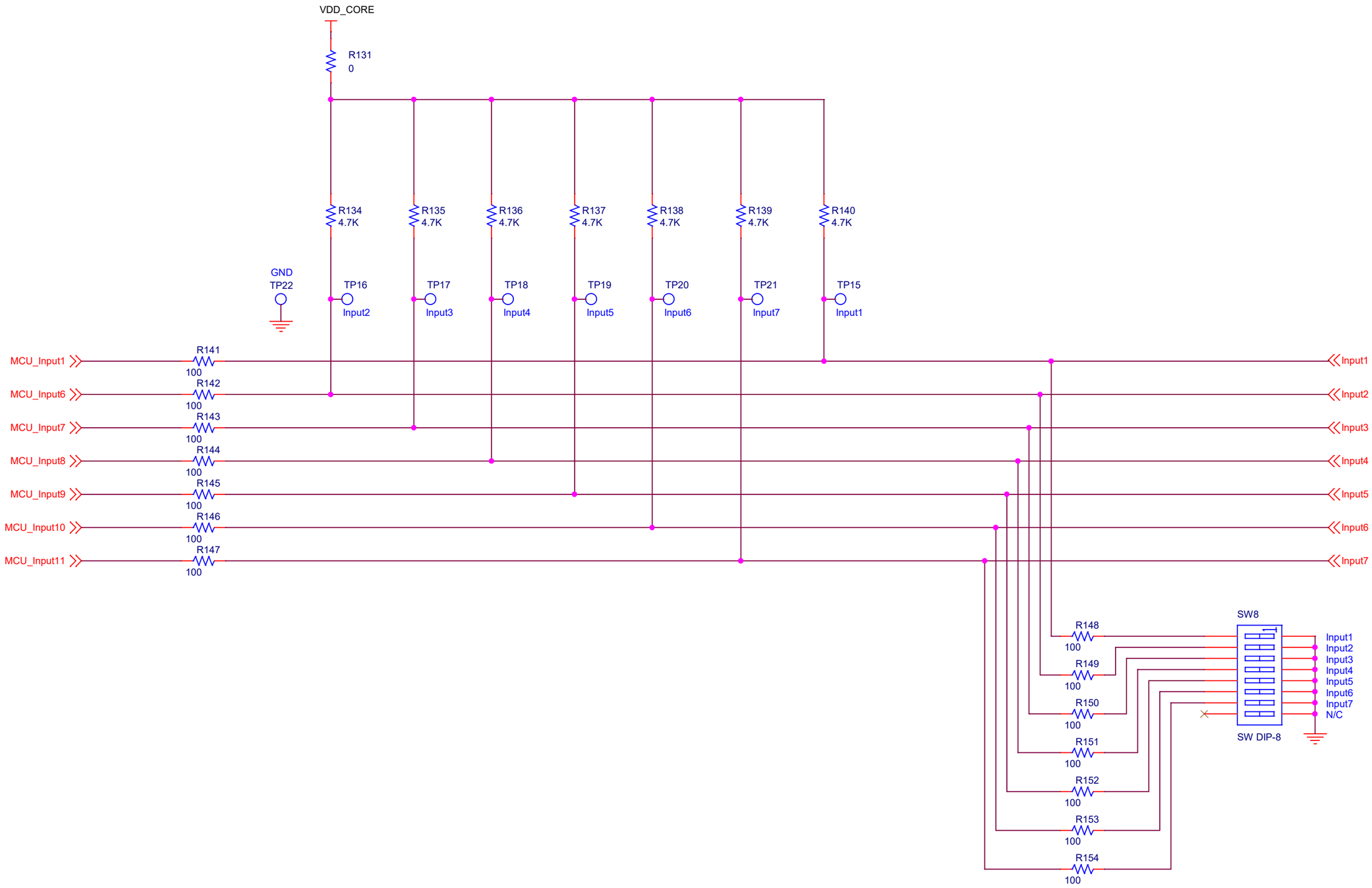

SILICON LABS

400 W Cesar Chavez
Austin, TX 78701

Title	GPIO inputs	
Size B	Document Number SI5332-AM2 40-PIN QFN CUSTOMER EVB .	Rev 1.0
Date: Tuesday, August 06, 2019	Sheet 8 of 8	