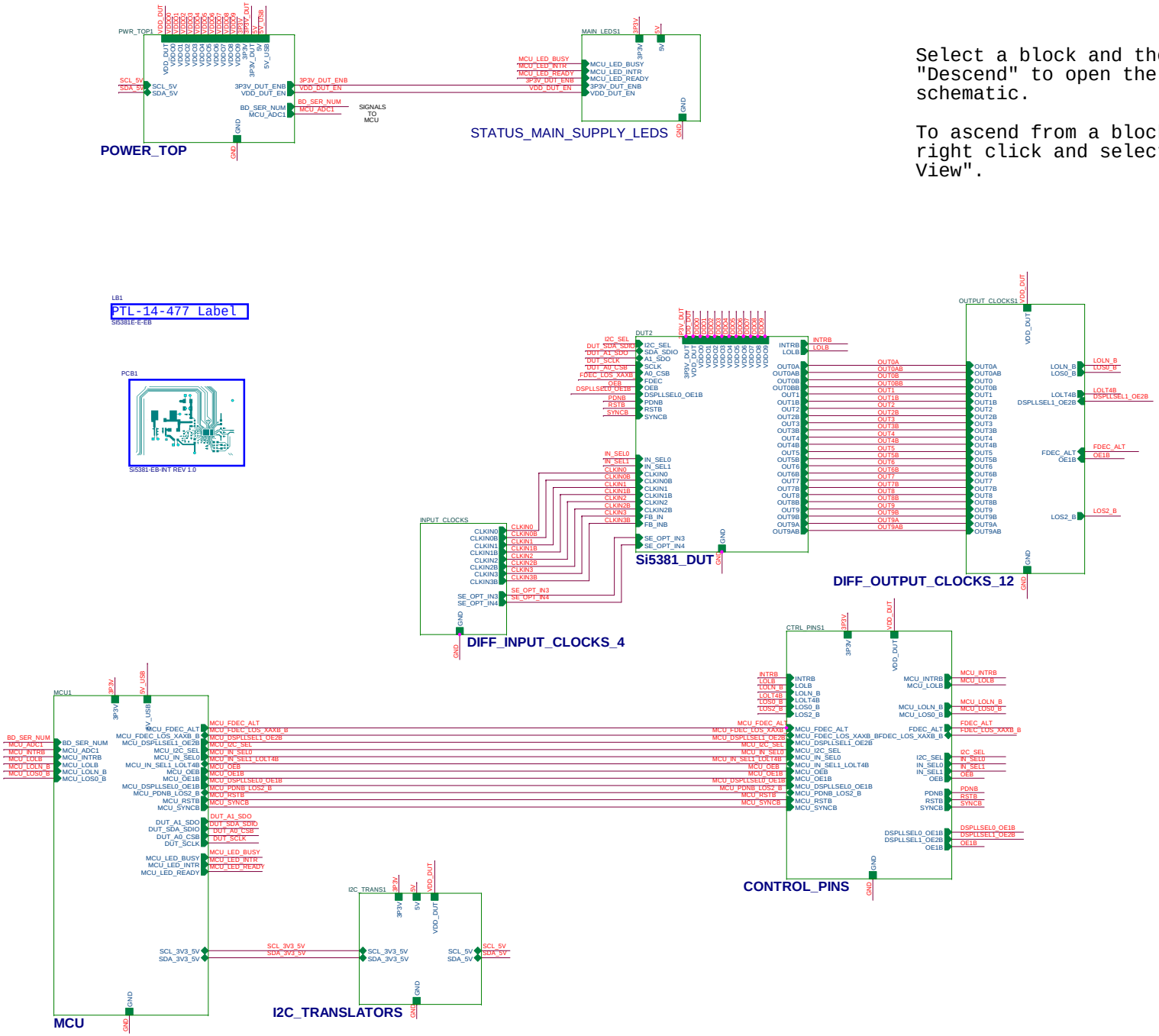

Select a block and then select "Descend" to open the block schematic.

To ascend from a block schematic, right click and select "Previous View".

SILICON LABS	400 W Cesar Chavez Austin, TX 78701	
Title	Si5381-EB_TOP	
Size C	Document Number Si5381-E-EB	Rev 1.1
Date: Friday, July 28, 2017	Sheet 1 of 44	

REVISION CONTROL

Rev 1.0 - March 20, 2017, Initial Board Release
Travis Turner

Rev 1.1 - July 28, 2017, Changed R162, R163, and R164 from 1K to 2.49K
Travis Turner

400 W Cesar Chavez
Austin, TX 78701

Title	SI5381-EB_TOP_REVISION	
Size B	Document Number SI5381E-E-EB	Rev 1.1
Date: Friday, July 28, 2017	Sheet 2 of 44	

CONTROL PINS CONNECTIONS

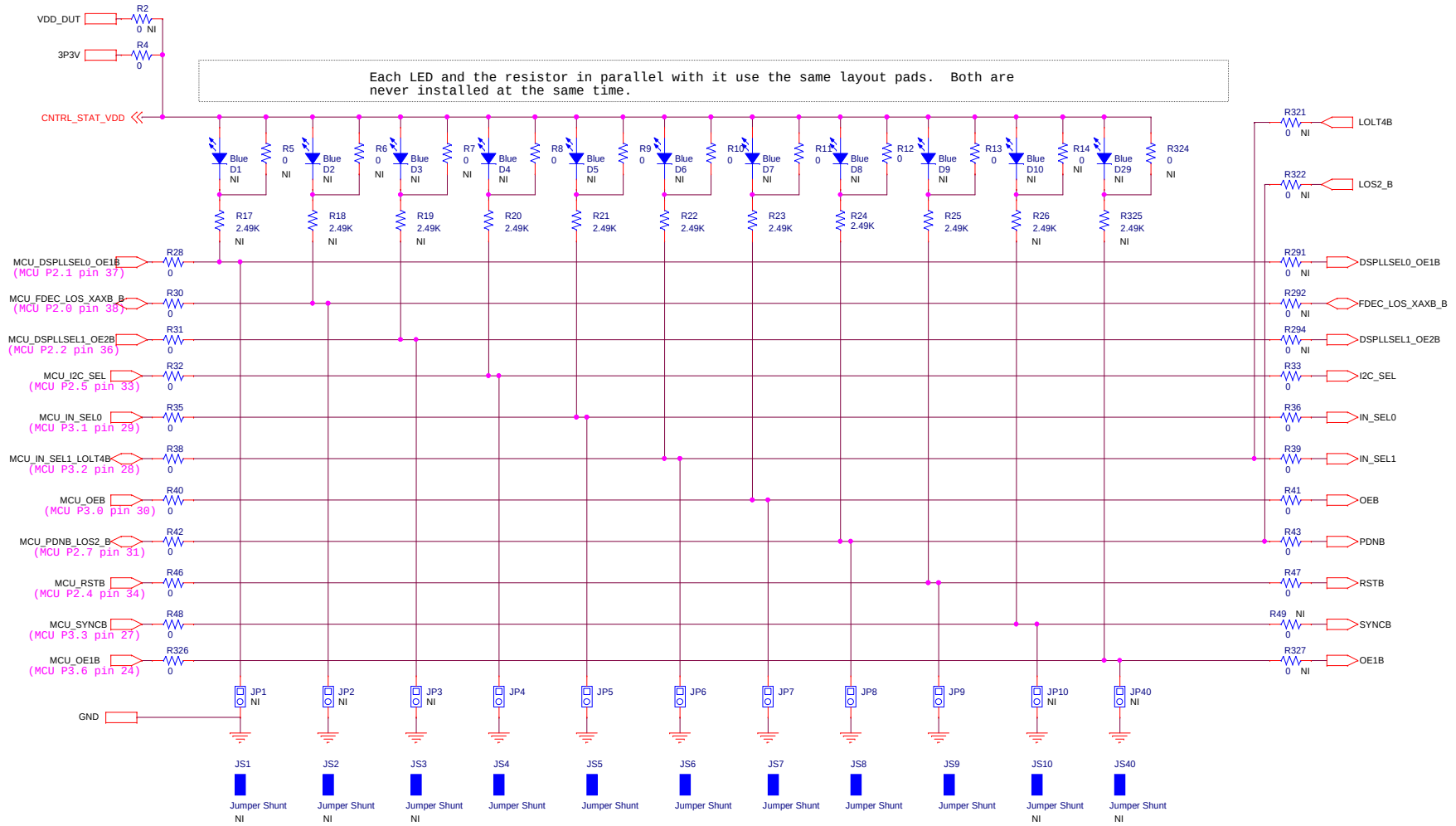

SILICON LABS
400 W Cesar Chavez
Austin, TX 78701

Title	CONTROL PINS_P1	
Size B	Document Number SI5381E-E-EB	Rev 1.1
Date: Tuesday, June 13, 2017	Sheet 3 of 44	

CONTROL PINS CONNECTIONS

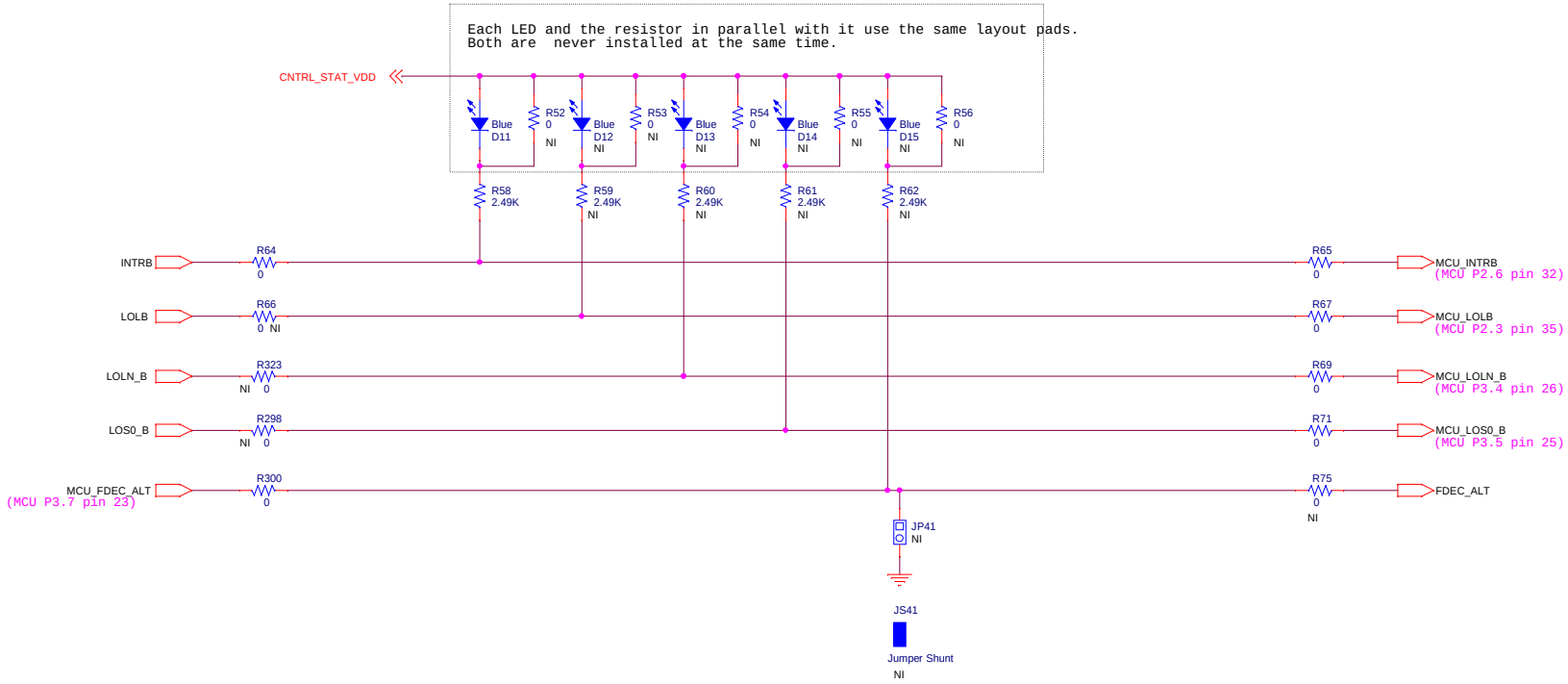

SILICON LABS	400 W Cesar Chavez Austin, TX 78701	
Title	CONTROL_PINS_P2	
Size B	Document Number SI5381E-E-EB	Rev 1.1
Date: Tuesday, June 13, 2017	Sheet 4 of 44	

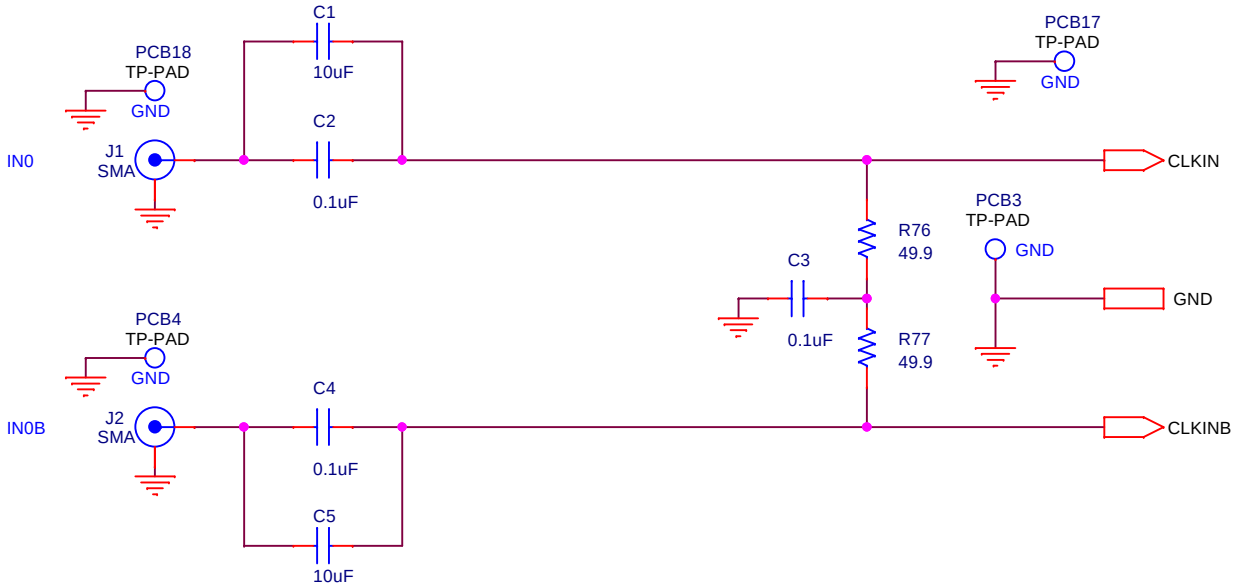

SILICON LABS

400 W Cesar Chavez
Austin, TX 78701

Title
DIFF_INPUT_CLK

Size	Document Number	Rev
A	SI5381E-E-EB	1.1

Date: Tuesday, June 13, 2017 Sheet 5 of 44

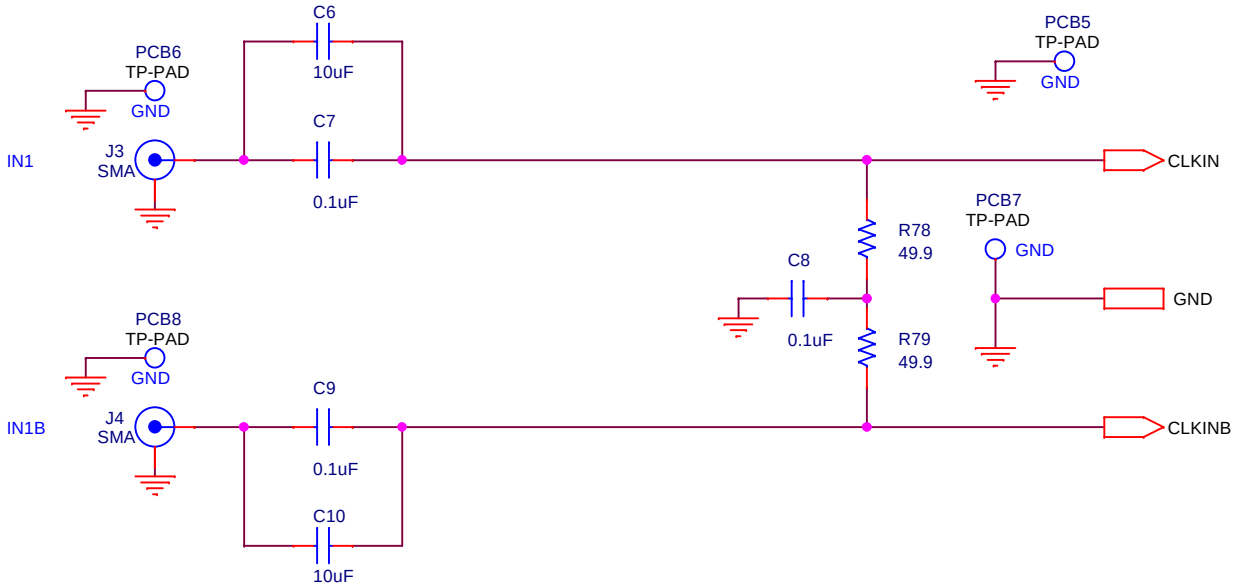

SILICON LABS

400 W Cesar Chavez
Austin, TX 78701

Title
DIFF_INPUT_CLK

Size	Document Number	Rev
A	SI5381E-E-EB	1.1

Date: Tuesday, June 13, 2017 Sheet 6 of 44

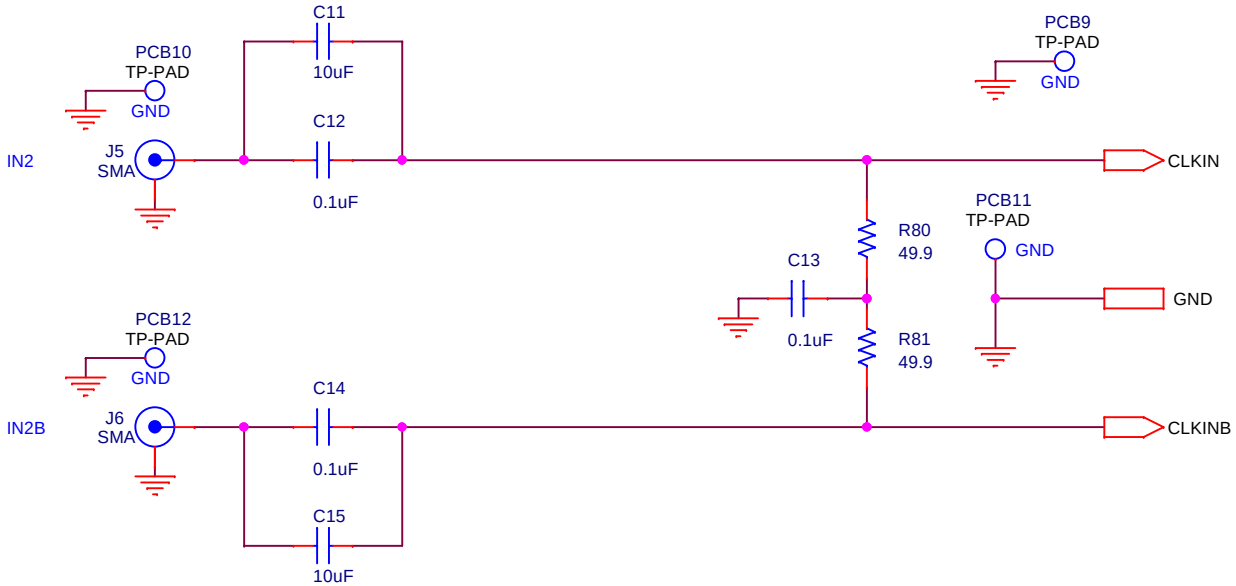

SILICON LABS

400 W Cesar Chavez
Austin, TX 78701

Title
DIFF_INPUT_CLK

Size	Document Number	Rev
A	SI5381E-E-EB	1.1

Date: Tuesday, June 13, 2017 Sheet 7 of 44

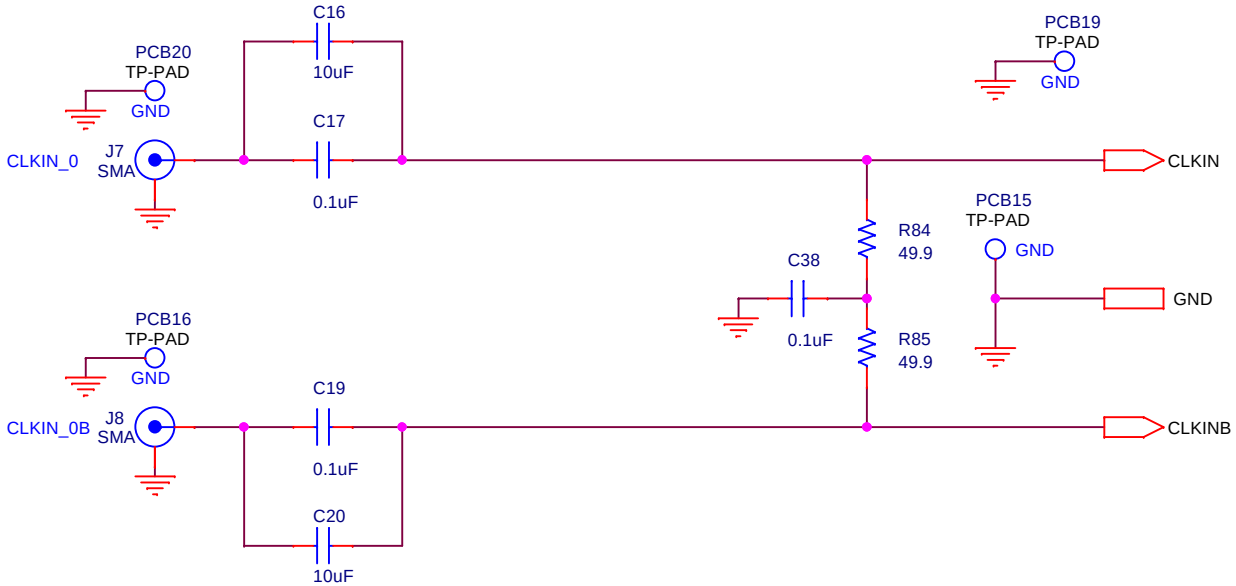

SILICON LABS

400 W Cesar Chavez
Austin, TX 78701

Title
DIFF_INPUT_CLK

Size	Document Number	Rev
A	SI5381E-E-EB	1.1

Date: Tuesday, June 13, 2017 Sheet 8 of 44

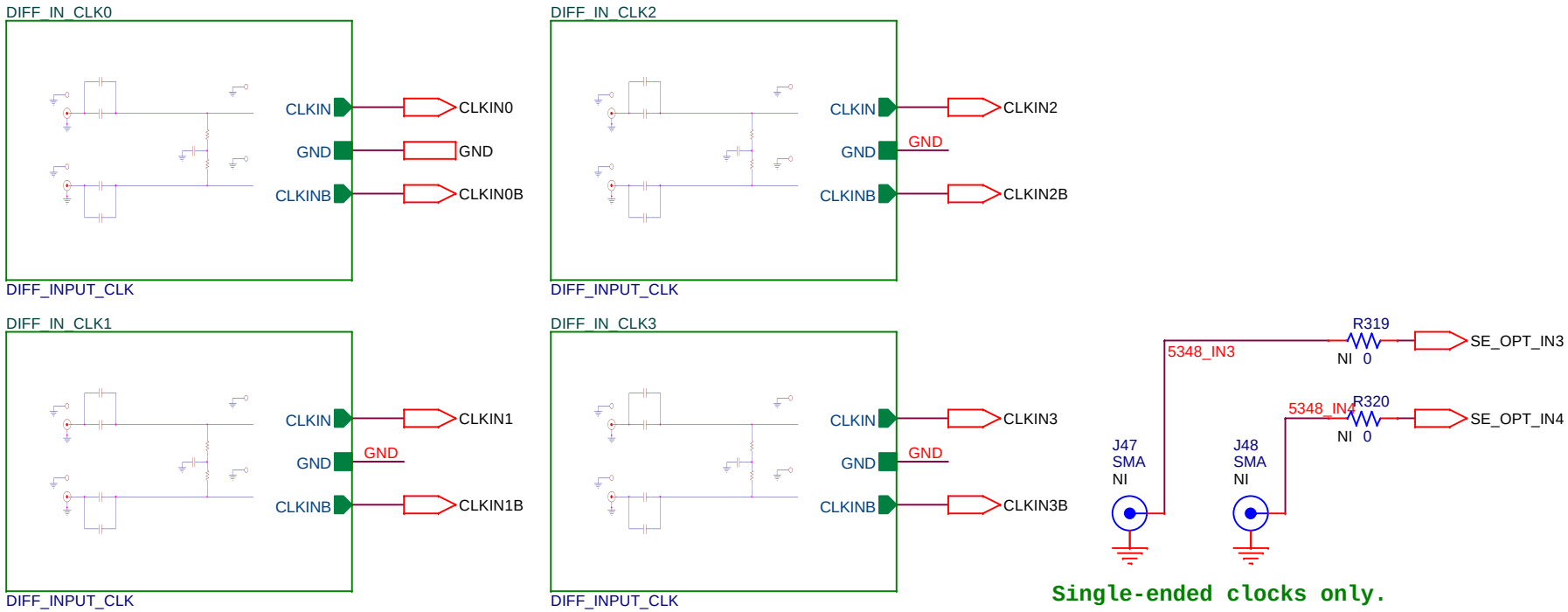

SILICON LABS

400 W Cesar Chavez
Austin, TX 78701

Title
DIFF_INPUT_CLOCKS_4

Size	Document Number	Rev
A	SI5381E-E-EB	1.1

Date: Tuesday, June 13, 2017 Sheet 9 of 44

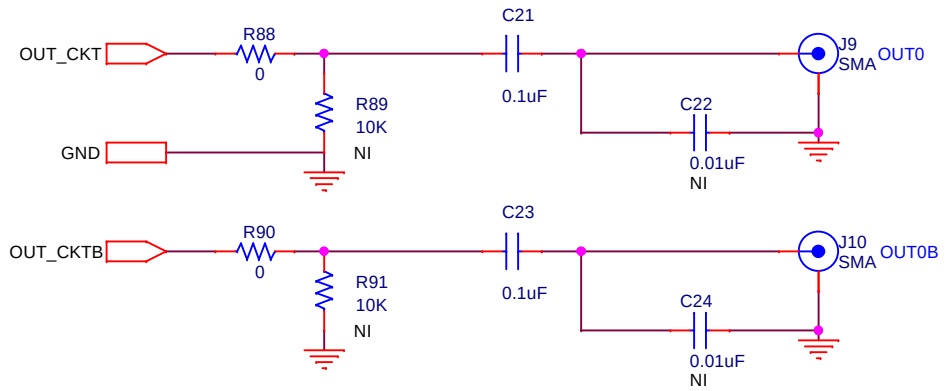

SILICON LABS
400 W Cesar Chavez
Austin, TX 78701

Title
DIFF_OUTPUT_CLK

Size	Document Number	Rev
A	SI5381E-E-EB	1.1

Date: Tuesday, June 13, 2017 Sheet 10 of 44

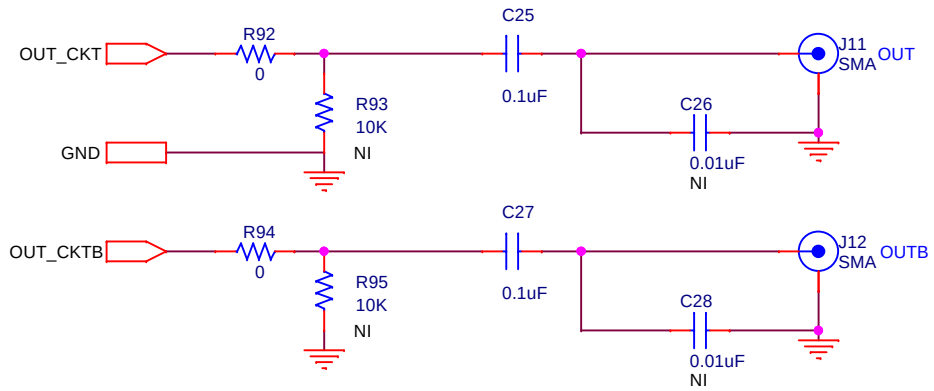

SILICON LABS
400 W Cesar Chavez
Austin, TX 78701

Title
DIFF_OUTPUT_CLK

Size	Document Number	Rev
A	SI5381E-E-EB	1.1

Date: Tuesday, June 13, 2017 Sheet 11 of 44

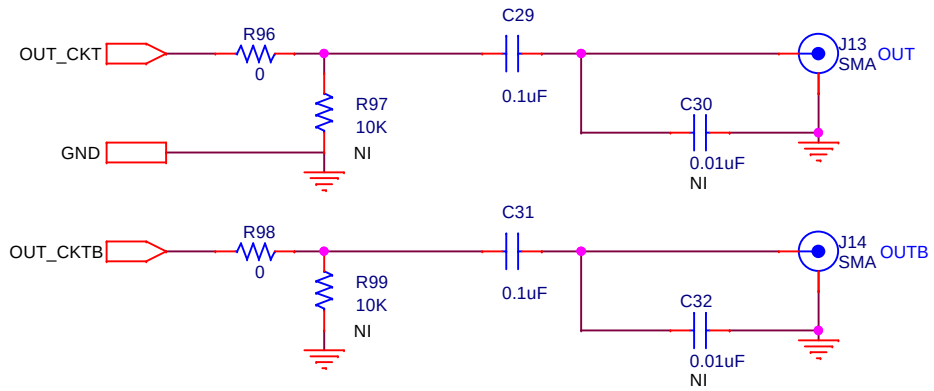

SILICON LABS
400 W Cesar Chavez
Austin, TX 78701

Title
DIFF_OUTPUT_CLK

Size	Document Number	Rev
A	SI5381E-E-EB	1.1

Date: Tuesday, June 13, 2017 Sheet 12 of 44

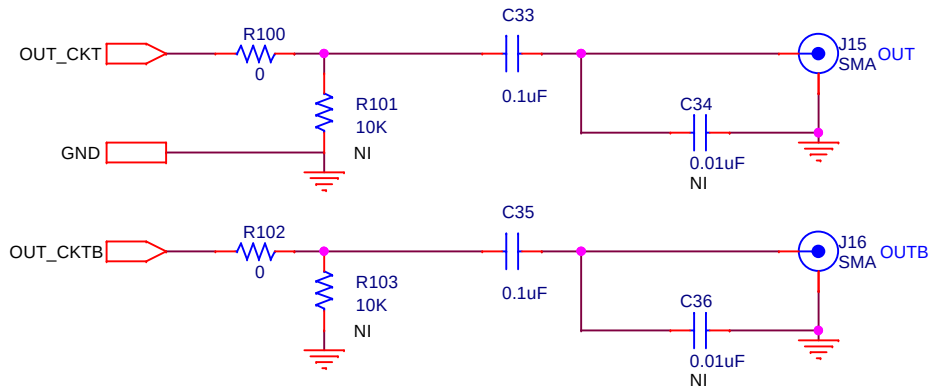

SILICON LABS
400 W Cesar Chavez
Austin, TX 78701

Title
DIFF_OUTPUT_CLK

Size	Document Number	Rev
A	SI5381E-E-EB	1.1

Date: Tuesday, June 13, 2017 Sheet 13 of 44

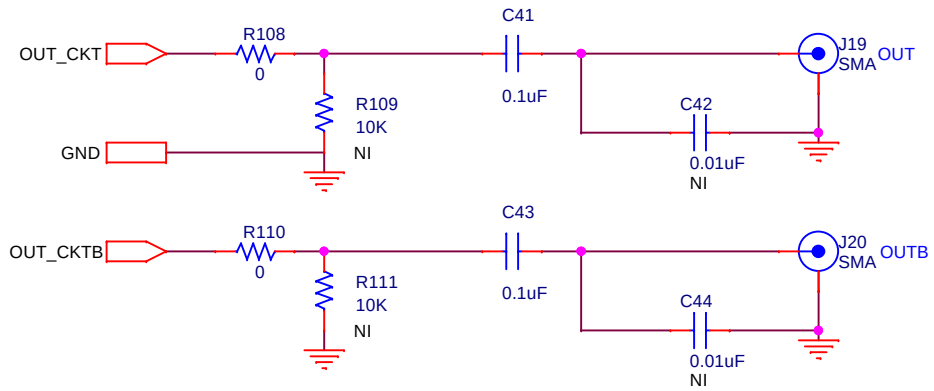

SILICON LABS
400 W Cesar Chavez
Austin, TX 78701

Title
DIFF_OUTPUT_CLK

Size	Document Number	Rev
A	SI5381E-E-EB	1.1

Date: Tuesday, June 13, 2017 Sheet 14 of 44

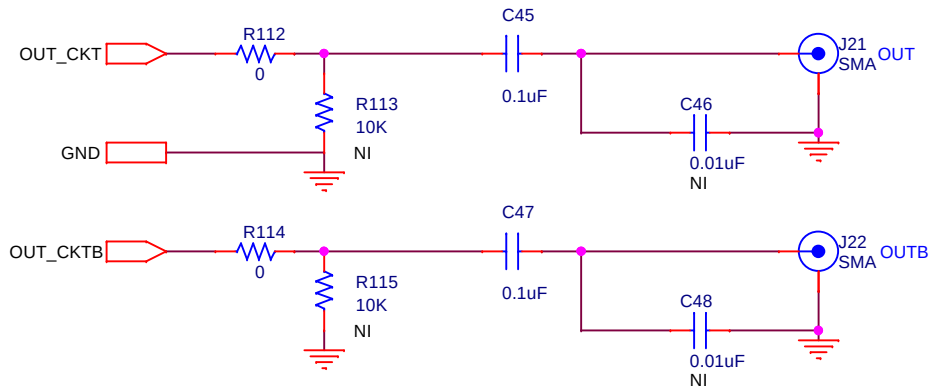

SILICON LABS
400 W Cesar Chavez
Austin, TX 78701

Title
DIFF_OUTPUT_CLK

Size	Document Number	Rev
A	SI5381E-E-EB	1.1

Date: Tuesday, June 13, 2017 Sheet 15 of 44

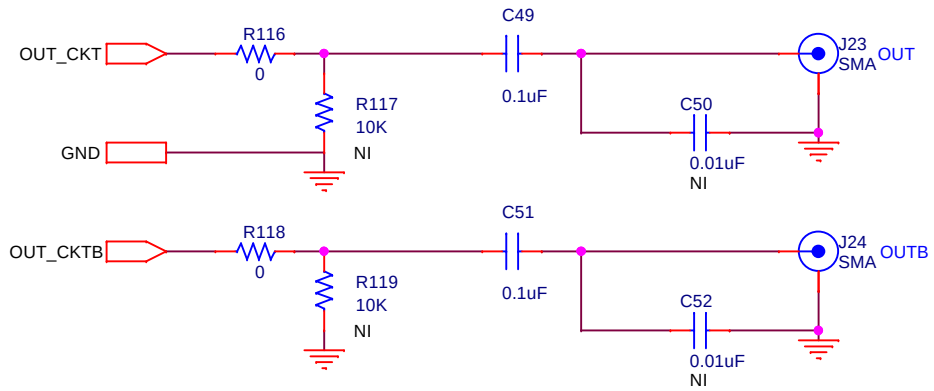

SILICON LABS
400 W Cesar Chavez
Austin, TX 78701

Title
DIFF_OUTPUT_CLK

Size	Document Number	Rev
A	SI5381E-E-EB	1.1

Date: Tuesday, June 13, 2017 Sheet 16 of 44

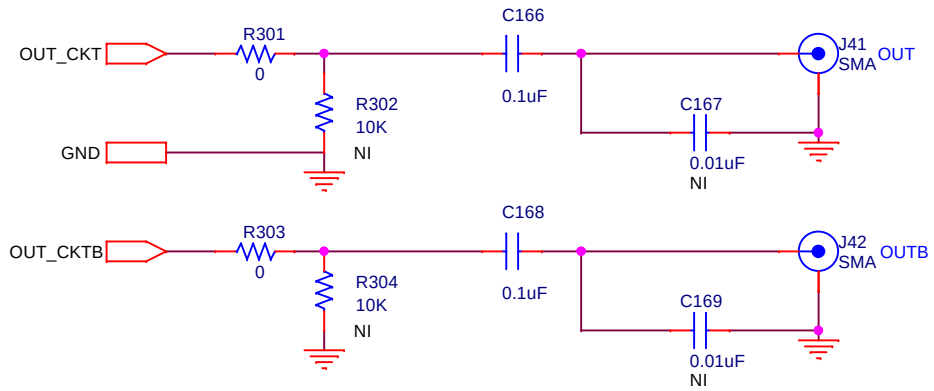

SILICON LABS
400 W Cesar Chavez
Austin, TX 78701

Title
DIFF_OUTPUT_CLK

Size	Document Number	Rev
A	SI5381E-E-EB	1.1

Date: Tuesday, June 13, 2017 Sheet 17 of 44

DIFF_OUTPUT_CLK_DIG_IO

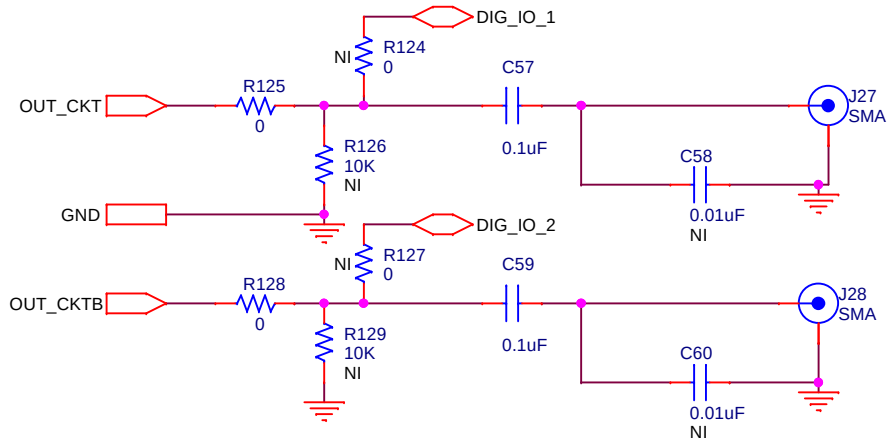

SILICON LABS
400 W Cesar Chavez
Austin, TX 78701

Title
DIFF_OUTPUT_CLK_DIG_IO

Size	Document Number	Rev
A	SI5381E-E-EB	1.1

Date: Tuesday, June 13, 2017 Sheet 18 of 44

DIFF_OUTPUT_CLK_DIG_IO

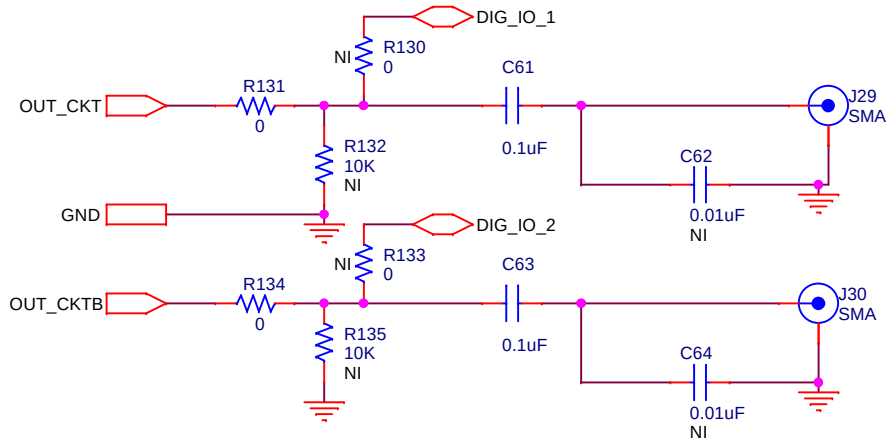

SILICON LABS
400 W Cesar Chavez
Austin, TX 78701

Title	DIFF_OUTPUT_CLK_DIG_IO	
Size A	Document Number SI5381E-E-EB	Rev 1.1
Date: Tuesday, June 13, 2017	Sheet 19 of 44	

DIFF_OUTPUT_CLK_DIG_IO

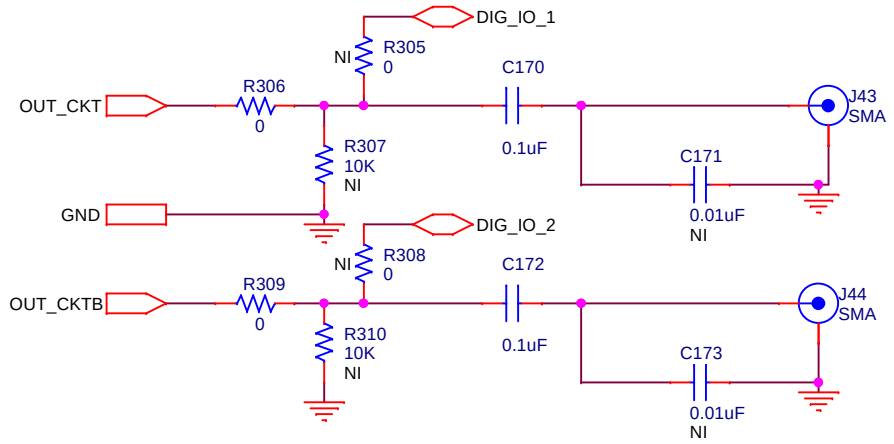

SILICON LABS
400 W Cesar Chavez
Austin, TX 78701

Title	DIFF_OUTPUT_CLK_DIG_IO	
Size A	Document Number SI5381E-E-EB	Rev 1.1
Date: Tuesday, June 13, 2017	Sheet 20 of 44	

DIFF_OUTPUT_CLK_DIG_IO

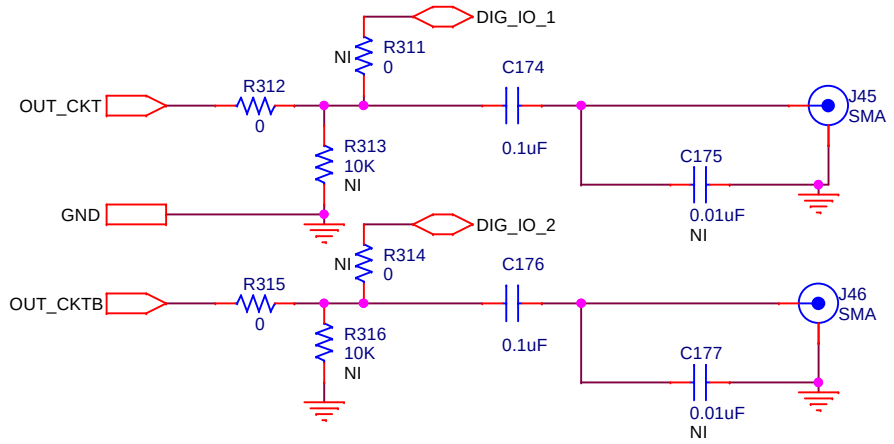

SILICON LABS
400 W Cesar Chavez
Austin, TX 78701

Title	DIFF_OUTPUT_CLK_DIG_IO	
Size A	Document Number SI5381E-E-EB	Rev 1.1
Date: Tuesday, June 13, 2017	Sheet 21 of 44	

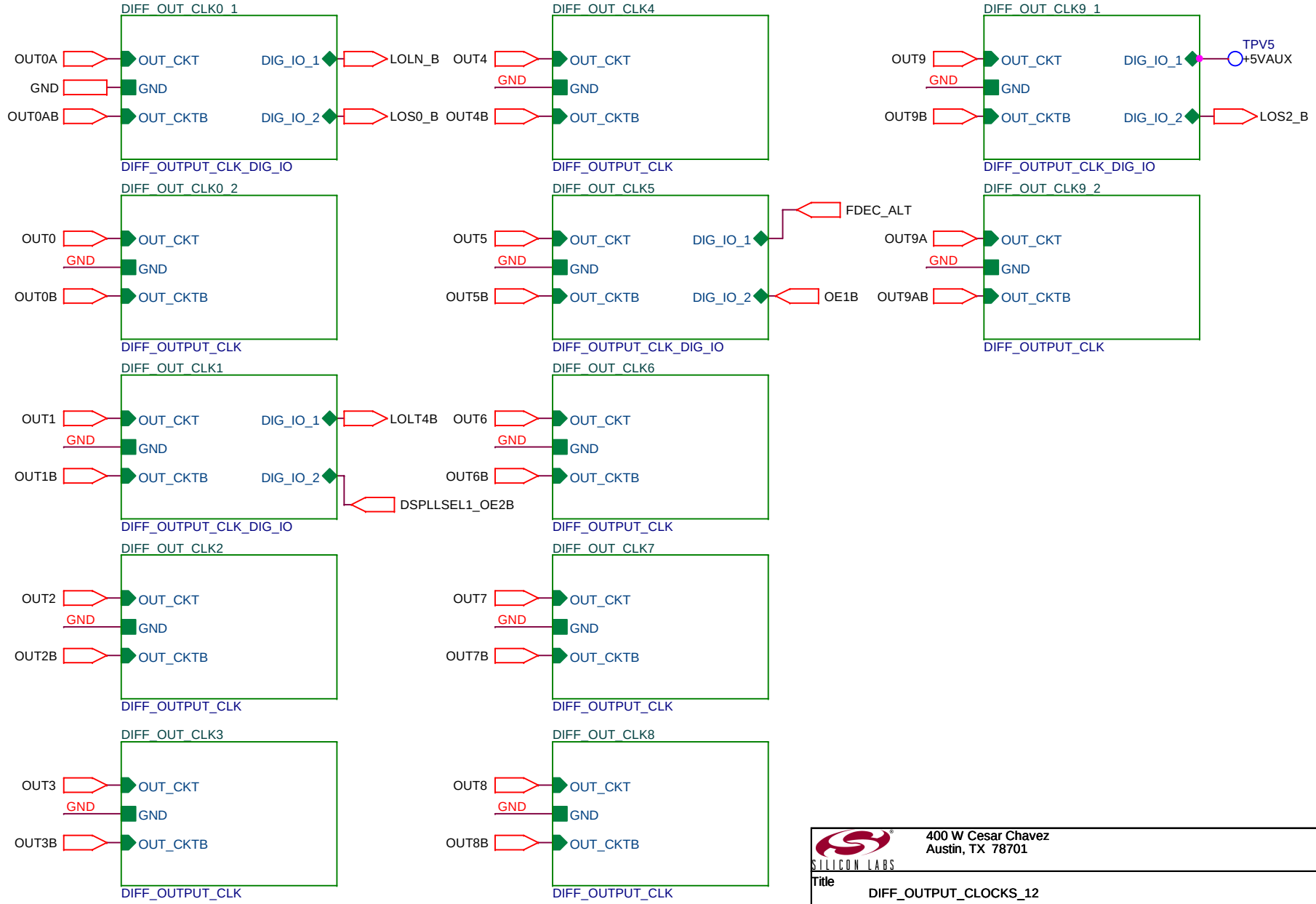

SILICON LABS

400 W Cesar Chavez
Austin, TX 78701

Title
DIFF_OUTPUT_CLOCKS_12

Size	Document Number	Rev
A	SI5381E-E-EB	1.1

Date: Tuesday, June 13, 2017 Sheet 22 of 44

Fixed 3.3V 150 mA Voltage Regulator

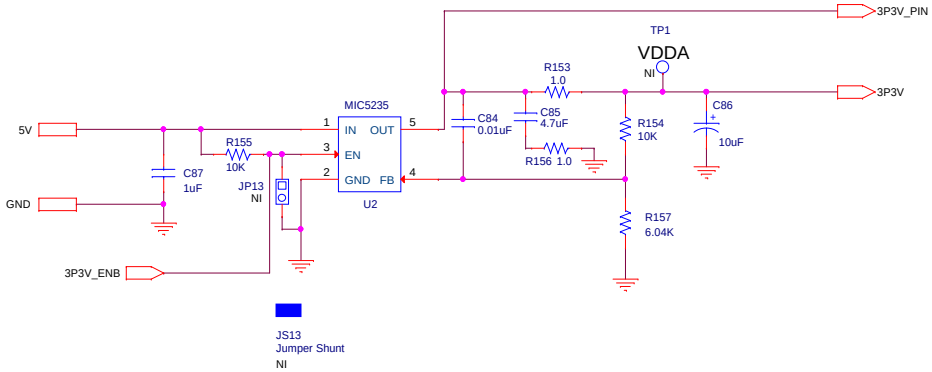

3P3V_DUT (In Schematic)

VDDA DUT (Board Silkscreen)

SILICON LABS	400 W Cesar Chavez Austin, TX 78701	
Title	VDD_REG_MIC5235	
Size B	Document Number SI5381E-E-EB	Rev 1.1
Date: Tuesday, June 13, 2017	Sheet 23 of 44	

Fixed 3.3V 100 mA Voltage Regulator
(Enabled, no current measurement supported.)

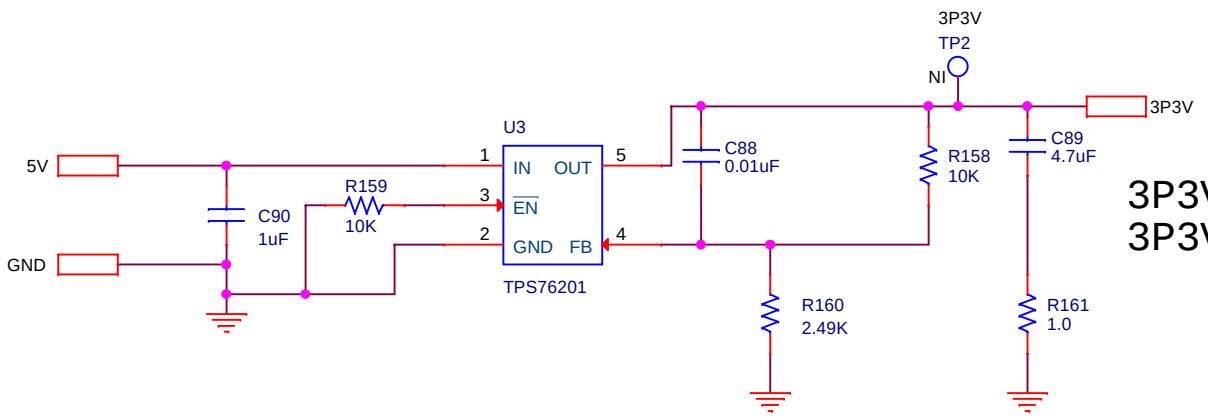

3P3V (In Schematic)
3P3V (Board Silkscreen)

SILICON LABS	400 W Cesar Chavez Austin, TX 78701	
Title	FIXED_3V3_REG_TPS76201_EN_NO_IM	
Size A	Document Number SI5381E-E-EB <Variant Name>	Rev 1.1
Date: Tuesday, June 13, 2017	Sheet 24 of 44	

I2C LEVEL TRANSLATORS

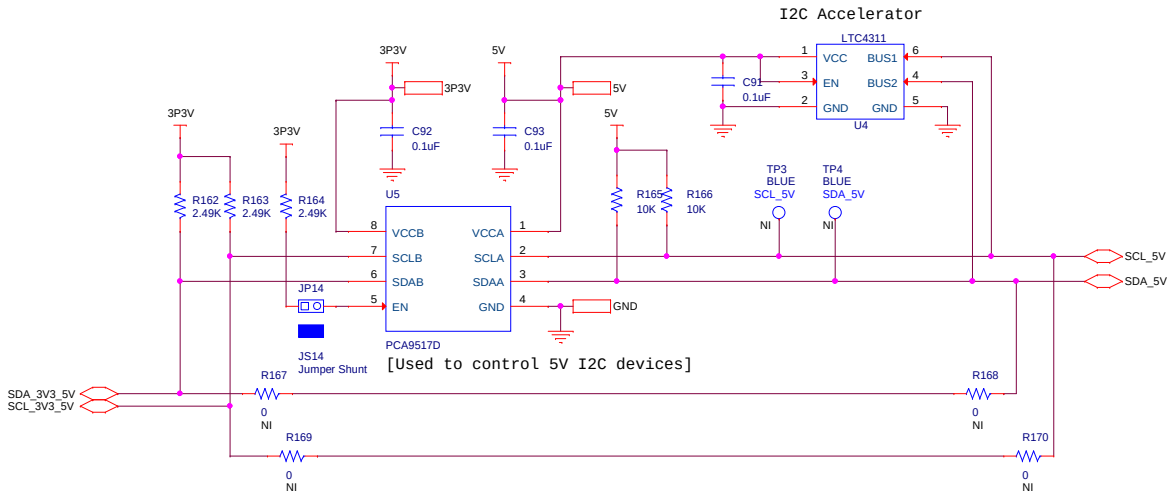

400 W Cesar Chavez
Austin, TX 78701

Title	I2C_TRANSLATORS	
Size B	Document Number SI5381E-E-EB	Rev 1.1
Date: Friday, July 28, 2017	Sheet 25 of 44	

MAIN POWER INPUT SELECTS

EXTERNAL OR USB

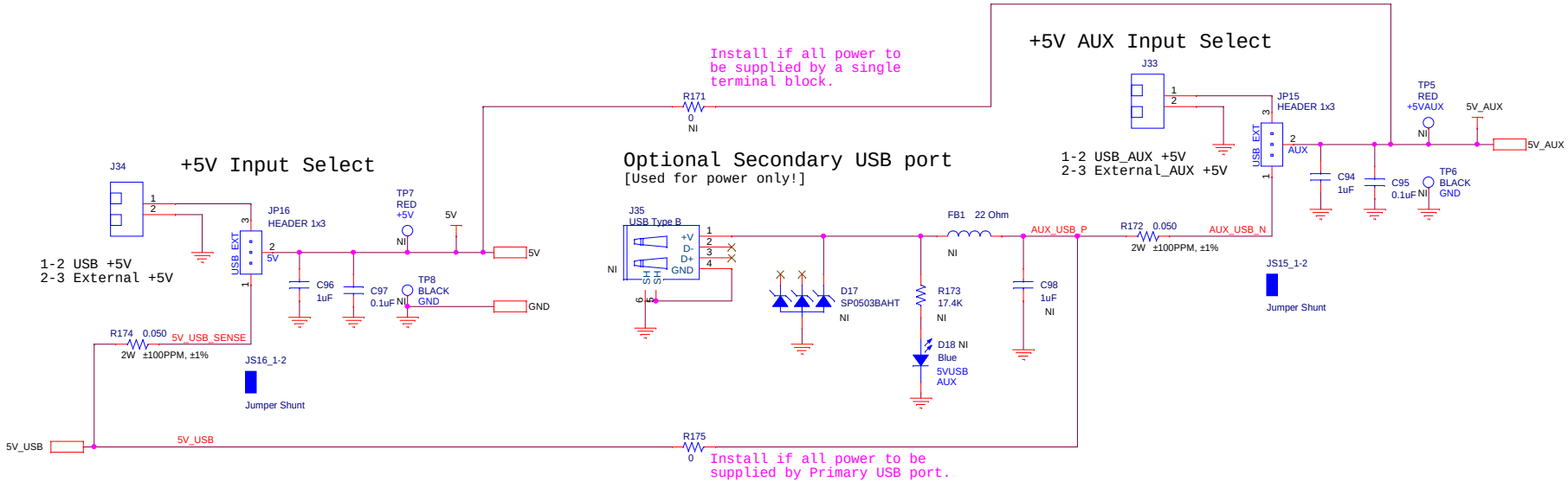

400 W Cesar Chavez
Austin, TX 78701

Title: MAIN_POWER_CONNECTIONS

Size	Document Number	Rev
B	SI5381E-E-EB	1.1

Date: Tuesday, June 13, 2017 Sheet 26 of 44

8051 MCU

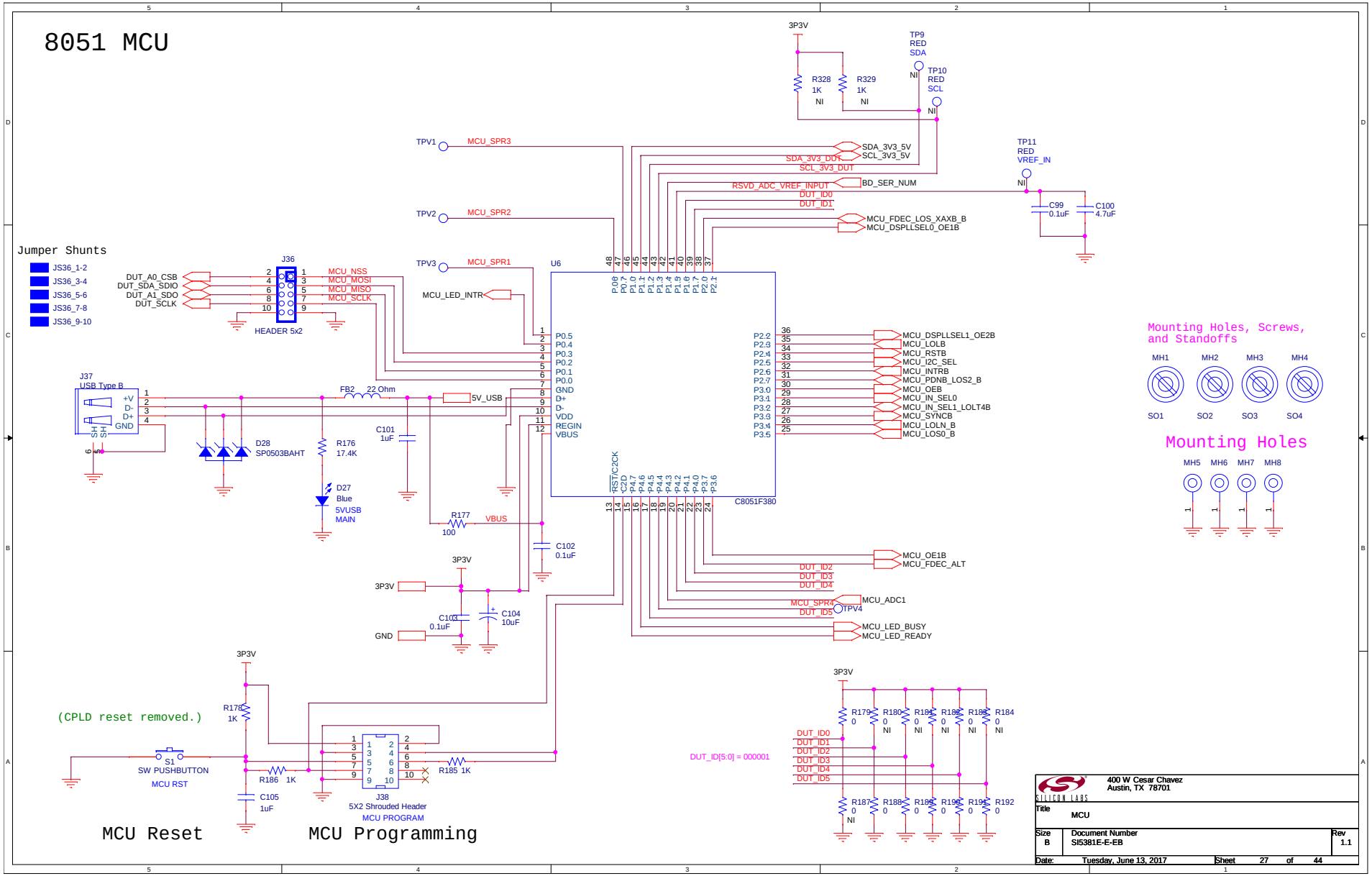
Jumper Shunts
JS36_1-2
JS36_3-4
JS36_5-6
JS36_7-8
JS36_9-10
J36
HEADER 5x2
DUT_A0_CSB
DUT_SDA_SDIO
DUT_A1_SDO
DUT_SCLK
MCU_NSS
MCU_MOSI
MCU_MISO
MCU_SCLK
TPV1
MCU_SPR3
TPV2
MCU_SPR2
TPV3
MCU_SPR1
MCU_LED_INTR
U6
C8051F380
3P3V
TP9
RED
SDA
TP10
RED
SCL
R328
1K
NI
R329
1K
NI
SDA_3V3_5V
SCL_3V3_5V
SDA_3V3_DUT
SCL_3V3_DUT
TP11
RED
VREF_IN
RSVD_ADC_VREF_INPUT
BD_SER_NUM
DUT_ID0
DUT_ID1
C99
0.1uF
C100
4.7uF
MCU_FDEC_LOS_XAXB_B
MCU_DSPLLSEL0_OE1B
MCU_DSPLLSEL1_OE2B
MCU_LOLB
MCU_RSTB
MCU_I2C_SEL
MCU_INTRB
MCU_PDNB_LOS2_B
MCU_OEB
MCU_IN_SEL0
MCU_IN_SEL1_LOLT4B
MCU_SYNCB
MCU_LOLN_B
MCU_LOS0_B
MCU_OE1B
MCU_FDEC_ALT
DUT_ID2
DUT_ID3
DUT_ID4
MCU_ADC1
MCU_SPR4
TPV4
DUT_ID5
MCU_LED_BUSY
MCU_LED_READY
J37
USB Type B
+V
D-
D+
GND
FB2
22 Ohm
5V_USB
C101
1uF
D28
SP0503BAHT
R176
17.4K
D27
Blue
5VUSB
MAIN
R177
100
VBUS
C102
0.1uF
C103
0.1uF
C104
10uF
GND
Mounting Holes, Screws, and Standoffs
MH1
MH2
MH3
MH4
SO1
SO2
SO3
SO4
Mounting Holes
MH5
MH6
MH7
MH8
(CPLD reset removed.)
R178
1K
S1
SW PUSHBUTTON
MCU RST
R186
1K
C105
1uF
J38
5X2 Shrouded Header
MCU PROGRAM
R185
1K
DUT_ID[5:0] = 000001
R179
R180
R181
R182
R183
R184
R187
R188
R189
R190
R191
R192
MCU Reset
MCU Programming
400 W Cesar Chavez
Austin, TX 78701
Title
MCU
Size
B
Document Number
SI5381E-E-EB
Rev
1.1
Date:
Tuesday, June 13, 2017
Sheet
27
of
44

PERIPHERALS

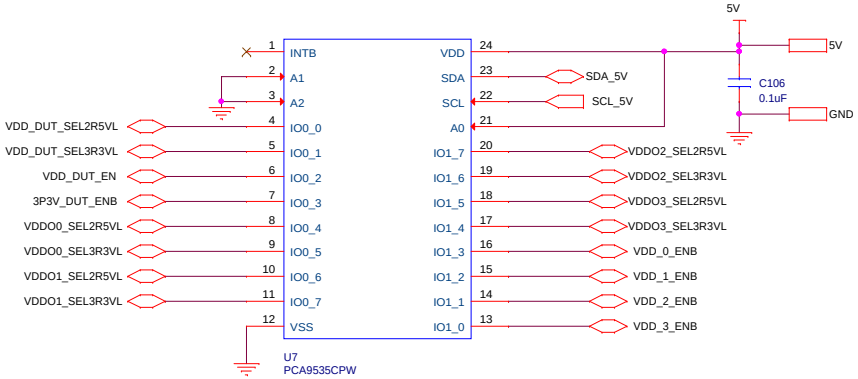

I2C VDD ENABLES/SELECTS FOR REGULATORS

I2C address: 0100001

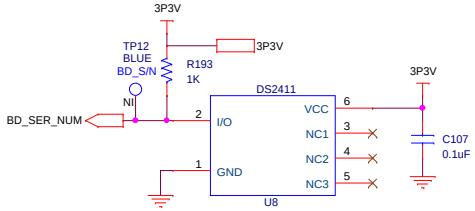

Board Serial Number

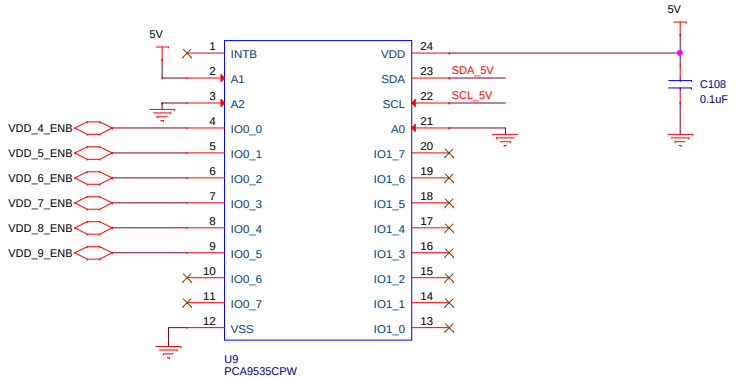

I2C VDD ENABLES/SELECTS FOR REGULATORS

I2C address: 0100010

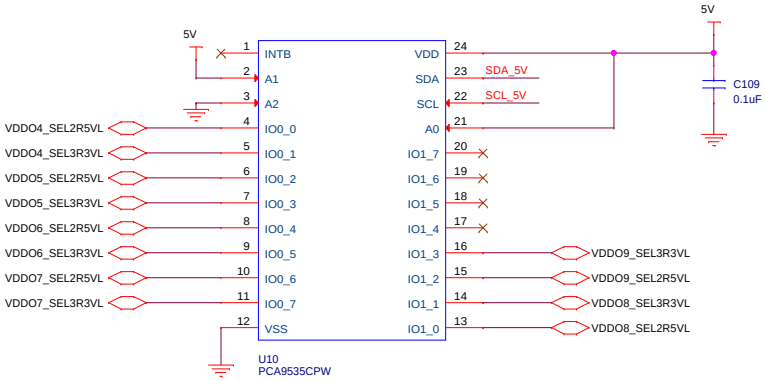

I2C VDD ENABLES/SELECTS FOR REGULATORS

I2C address: 0100011

400 W Cesar Chavez
Austin, TX 78701

Title	PERIPHERALS	
Size B	Document Number SI5381E-E-EB	Rev 1.1
Date: Tuesday, June 13, 2017	Sheet 28 of 44	

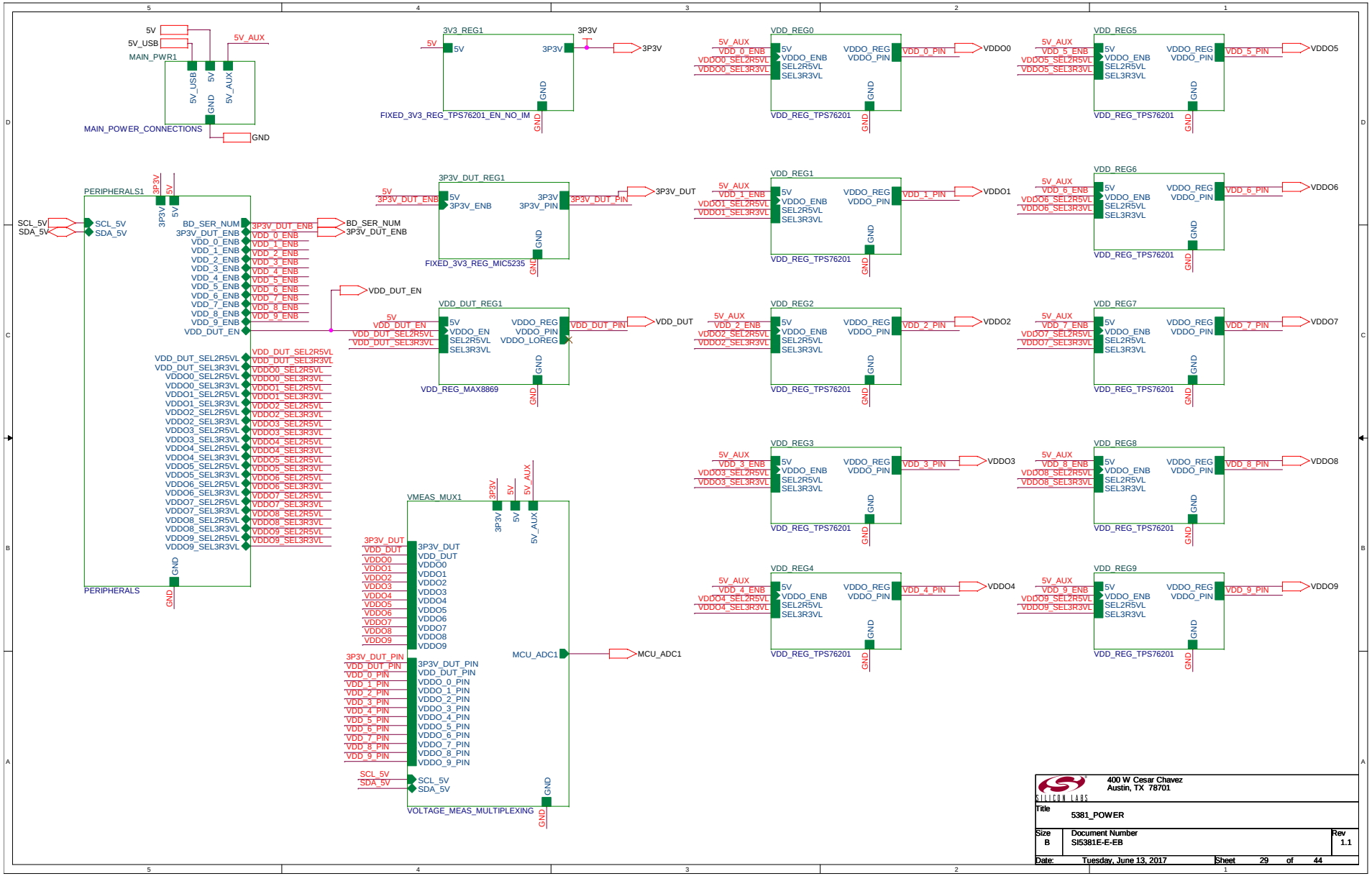
MAIN_PWR1
MAIN_POWER_CONNECTIONS
5V
5V_USB
5V_AUX
GND
3V3_REG1
FIXED_3V3_REG_TPS76201_EN_NO_IM
3P3V
3P3V_DUT_REG1
FIXED_3V3_REG_MIC5235
3P3V_DUT
3P3V_DUT_ENB
3P3V_ENB
3P3V_PIN
3P3V_DUT_PIN
VDD_DUT_REG1
VDD_REG_MAX8869
VDD_DUT
VDD_DUT_EN
VDDO_REG
VDDO_LOREG
VDD_REG0
VDD_REG1
VDD_REG2
VDD_REG3
VDD_REG4
VDD_REG5
VDD_REG6
VDD_REG7
VDD_REG8
VDD_REG9
VDD_REG_TPS76201
VDDO_ENB
VDDO_PIN
SEL2R5VL
SEL3R3VL
VDDO0
VDDO1
VDDO2
VDDO3
VDDO4
VDDO5
VDDO6
VDDO7
VDDO8
VDDO9
PERIPHERALS1
PERIPHERALS
SCL_5V
SDA_5V
BD_SER_NUM
VMEAS_MUX1
VOLTAGE_MEAS_MULTIPLEXING
MCU_ADC1
VDDO_0_PIN
VDDO_1_PIN
VDDO_2_PIN
VDDO_3_PIN
VDDO_4_PIN
VDDO_5_PIN
VDDO_6_PIN
VDDO_7_PIN
VDDO_8_PIN
VDDO_9_PIN
VDD_DUT_PIN
VDD_0_PIN
VDD_1_PIN
VDD_2_PIN
VDD_3_PIN
VDD_4_PIN
VDD_5_PIN
VDD_6_PIN
VDD_7_PIN
VDD_8_PIN
VDD_9_PIN
400 W Cesar Chavez
Austin, TX 78701
SILICON LABS
Title
5381_POWER
Size
B
Document Number
SI5381E-E-EB
Rev
1.1
Date:
Tuesday, June 13, 2017
Sheet
29
of
44

DUT CONNECTIONS

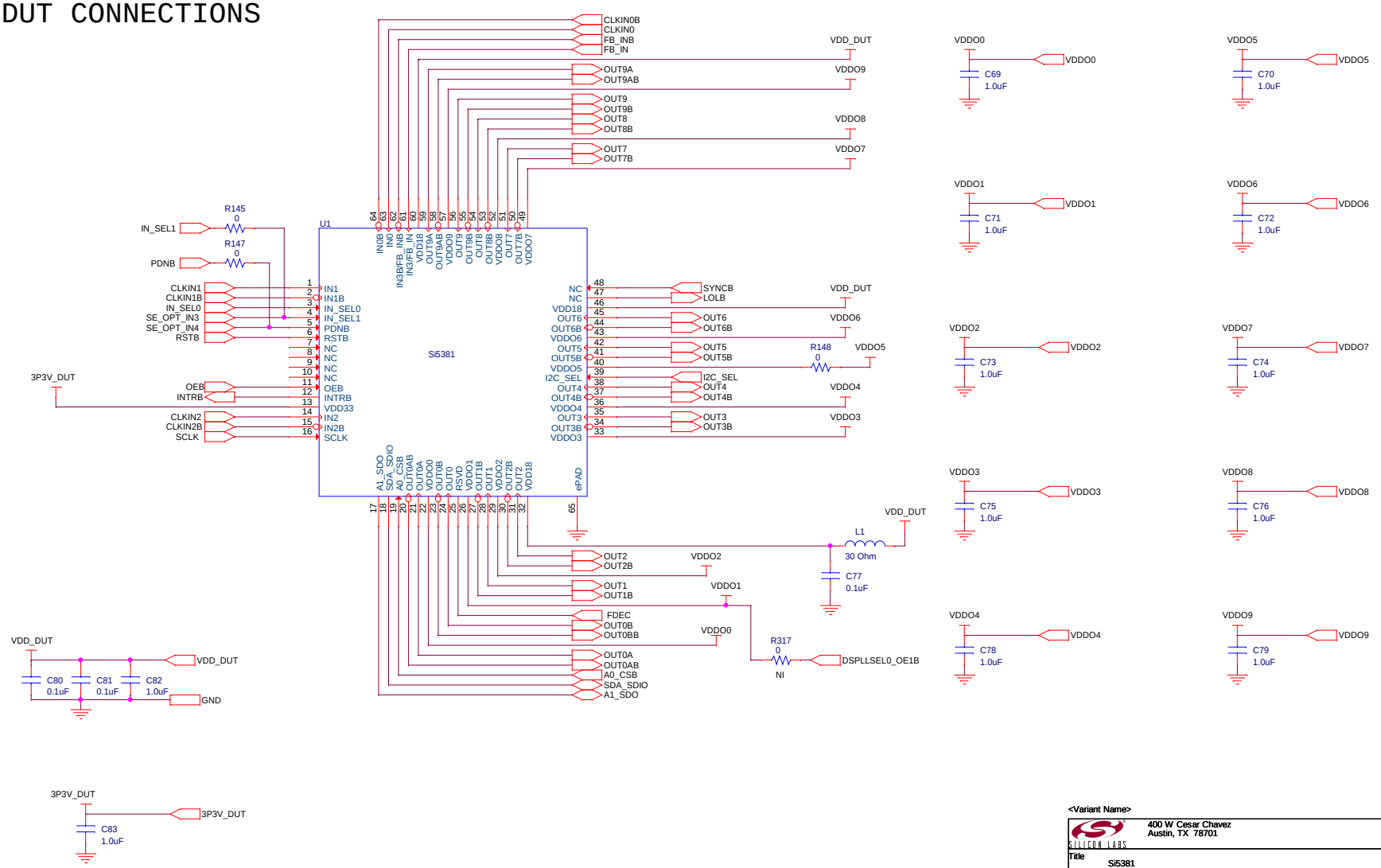

<Variant Name>

400 W Cesar Chavez
Austin, TX 78701

Title: Si5381

Size	Document Number	Rev
B	SI5381E-E-EB	1.1

Date: Tuesday, June 13, 2017 Sheet 31 of 44

LEDS - SUPPLIES & STATUS

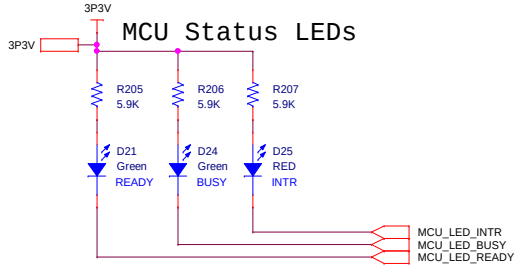

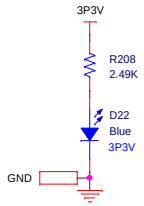

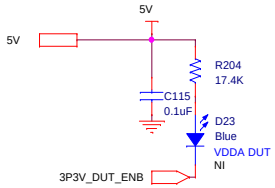

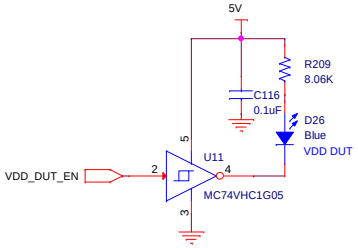

SILICON LABS	400 W Cesar Chavez Austin, TX 78701	
Title	STATUS_MAIN_SUPPLY_LEDS	
Size B	Document Number SI5381E-E-EB	Rev 1.1
Date: Tuesday, June 13, 2017	Sheet 32 of 44	

100 mA Adjustable Voltage Regulator

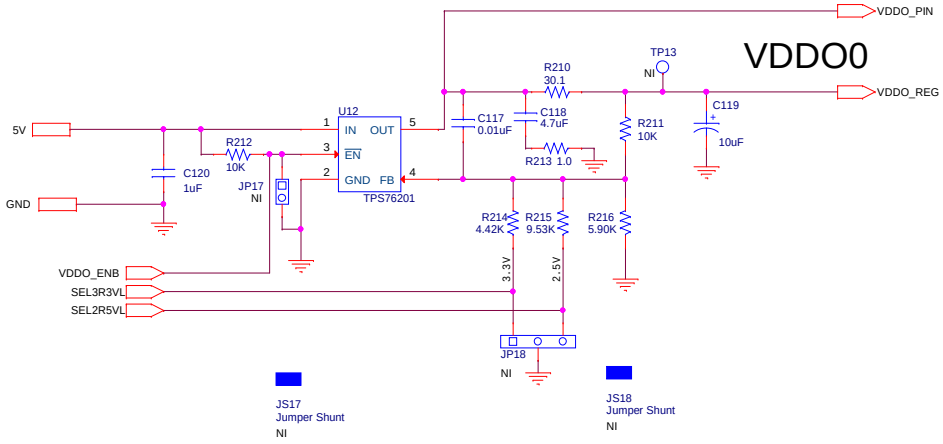

SILICON LABS	400 W Cesar Chavez Austin, TX 78701	
Title	VDD_REG_TPS76201	
Size B	Document Number SI5381E-E-EB	Rev 1.1
Date: Tuesday, June 13, 2017	Sheet 33 of 44	

100 mA Adjustable Voltage Regulator

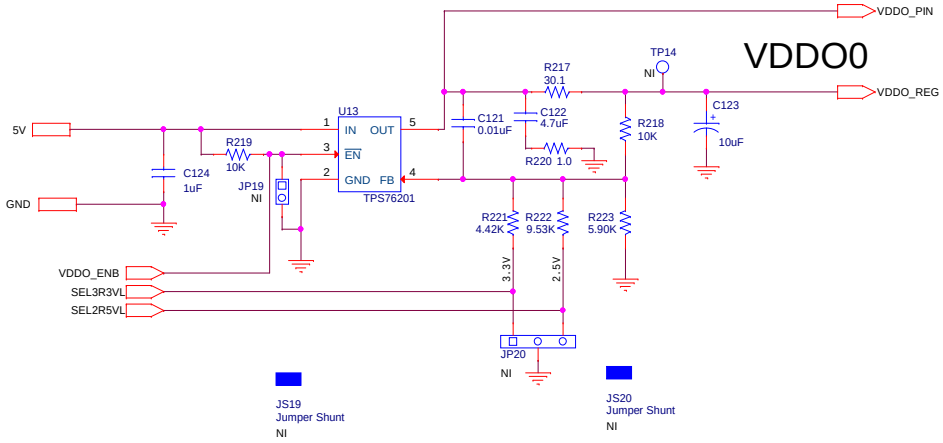

SILICON LABS	400 W Cesar Chavez Austin, TX 78701	
Title	VDD_REG_TPS76201	
Size B	Document Number SI5381E-E-EB	Rev 1.1
Date: Tuesday, June 13, 2017	Sheet 34 of 44	

100 mA Adjustable Voltage Regulator

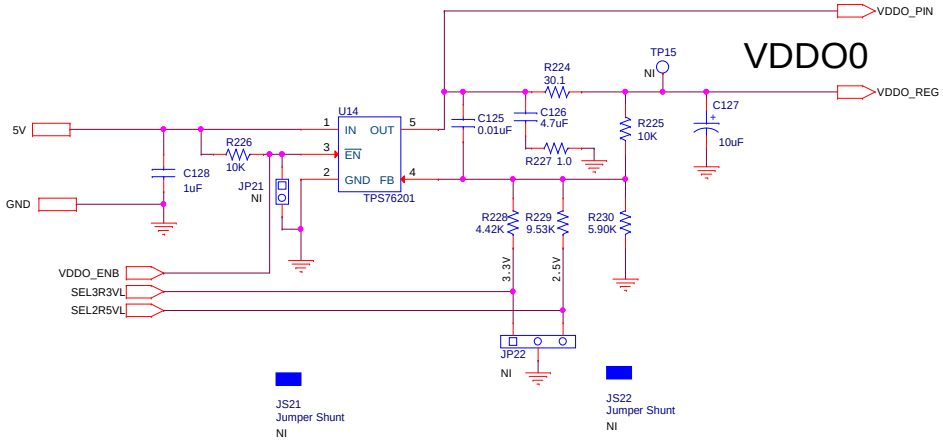

400 W Cesar Chavez
Austin, TX 78701

Title	VDD_REG_TPS76201	
Size B	Document Number SI5381E-E-EB	Rev 1.1
Date: Tuesday, June 13, 2017	Sheet 35 of 44	

100 mA Adjustable Voltage Regulator

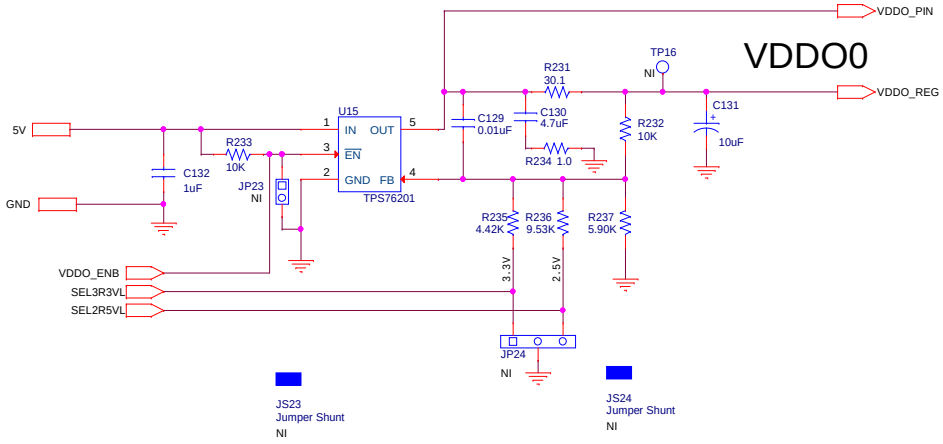

SILICON LABS	400 W Cesar Chavez Austin, TX 78701	
Title	VDD_REG_TPS76201	
Size B	Document Number SI5381E-E-EB	Rev 1.1
Date: Tuesday, June 13, 2017	Sheet 36 of 44	

100 mA Adjustable Voltage Regulator

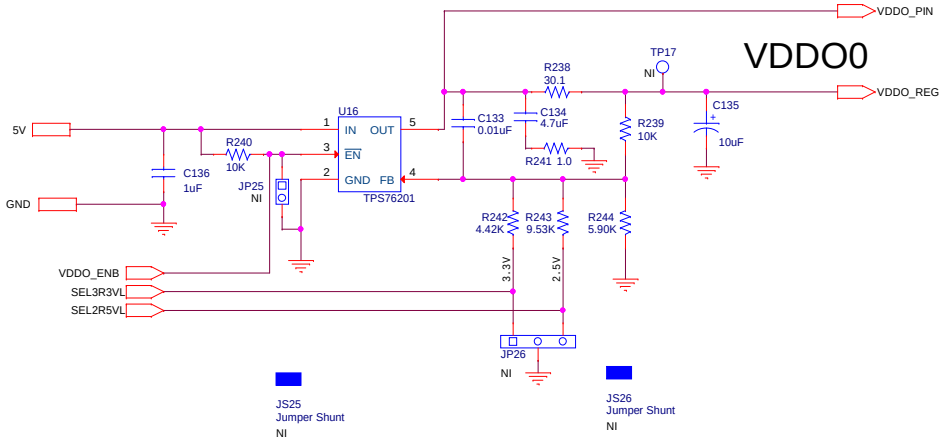

SILICON LABS	400 W Cesar Chavez Austin, TX 78701	
Title	VDD_REG_TPS76201	
Size B	Document Number SI5381E-E-EB	Rev 1.1
Date: Tuesday, June 13, 2017	Sheet 37 of 44	

100 mA Adjustable Voltage Regulator

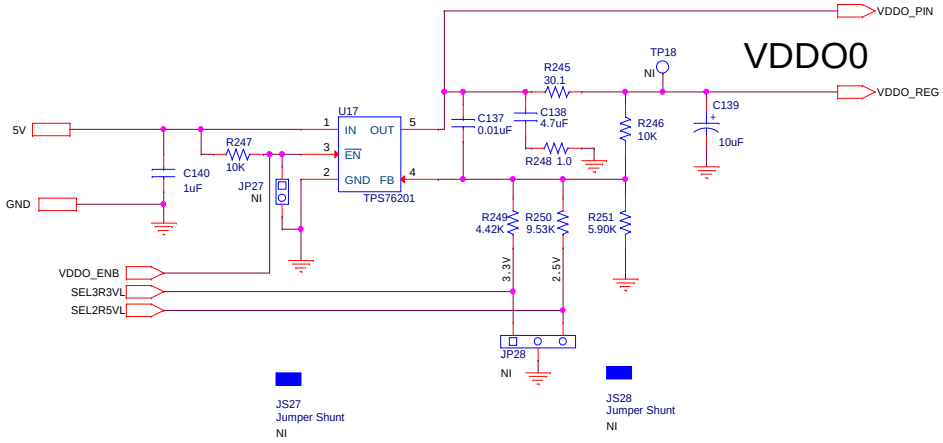

SILICON LABS	400 W Cesar Chavez Austin, TX 78701	
Title	VDD_REG_TPS76201	
Size B	Document Number SI5381E-E-EB	Rev 1.1
Date: Tuesday, June 13, 2017	Sheet 38 of 44	

100 mA Adjustable Voltage Regulator

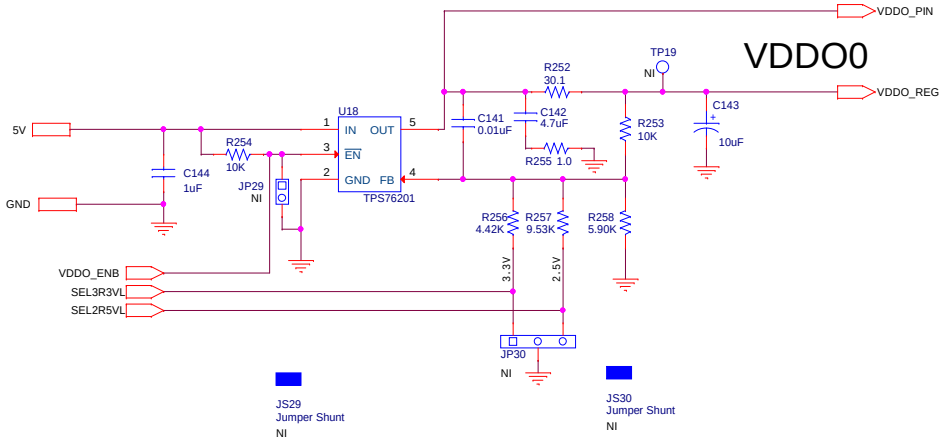

SILICON LABS	400 W Cesar Chavez Austin, TX 78701	
Title	VDD_REG_TPS76201	
Size B	Document Number SI5381E-E-EB	Rev 1.1
Date: Tuesday, June 13, 2017	Sheet 39 of 44	

100 mA Adjustable Voltage Regulator

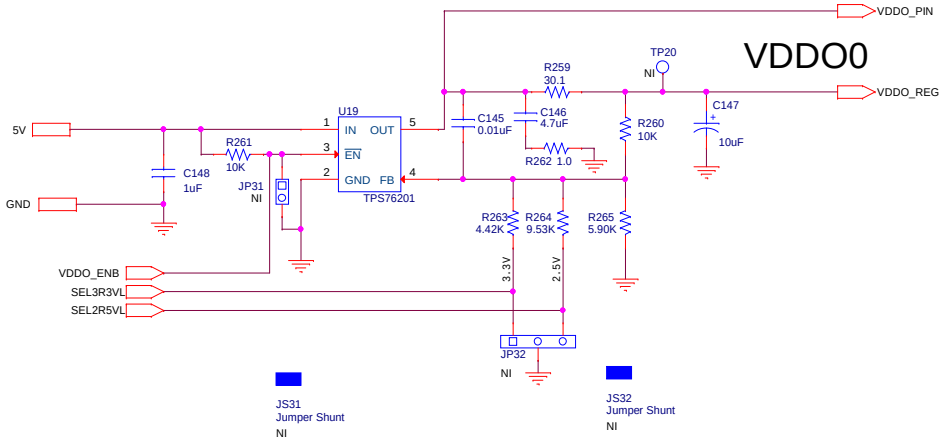

SILICON LABS	400 W Cesar Chavez Austin, TX 78701	
Title	VDD_REG_TPS76201	
Size B	Document Number SI5381E-E-EB	Rev 1.1
Date: Tuesday, June 13, 2017	Sheet 40 of 44	

100 mA Adjustable Voltage Regulator

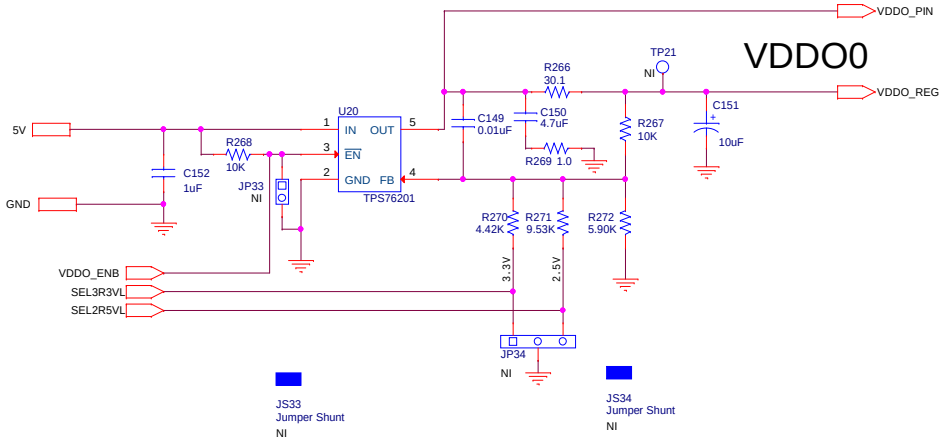

SILICON LABS	400 W Cesar Chavez Austin, TX 78701	
Title	VDD_REG_TPS76201	
Size B	Document Number SI5381E-E-EB	Rev 1.1
Date: Tuesday, June 13, 2017	Sheet 41 of 44	

100 mA Adjustable Voltage Regulator

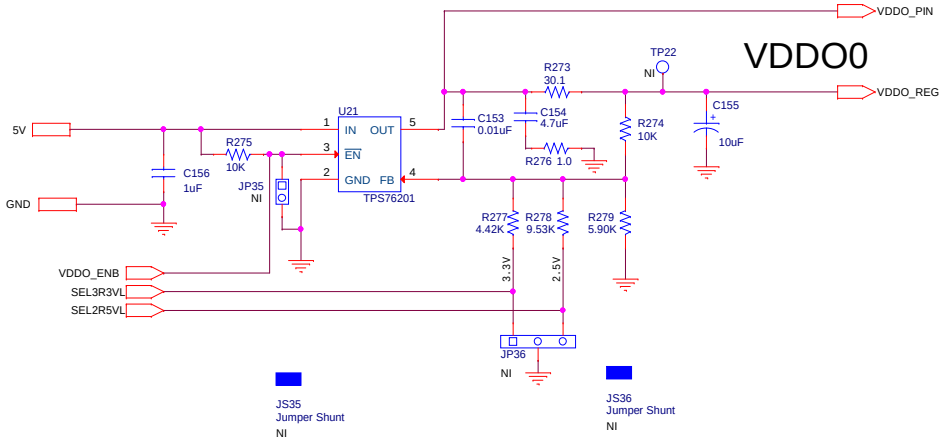

400 W Cesar Chavez
Austin, TX 78701

Title	VDD_REG_TPS76201	
Size B	Document Number SI5381E-E-EB	Rev 1.1
Date: Tuesday, June 13, 2017	Sheet 42 of 44	

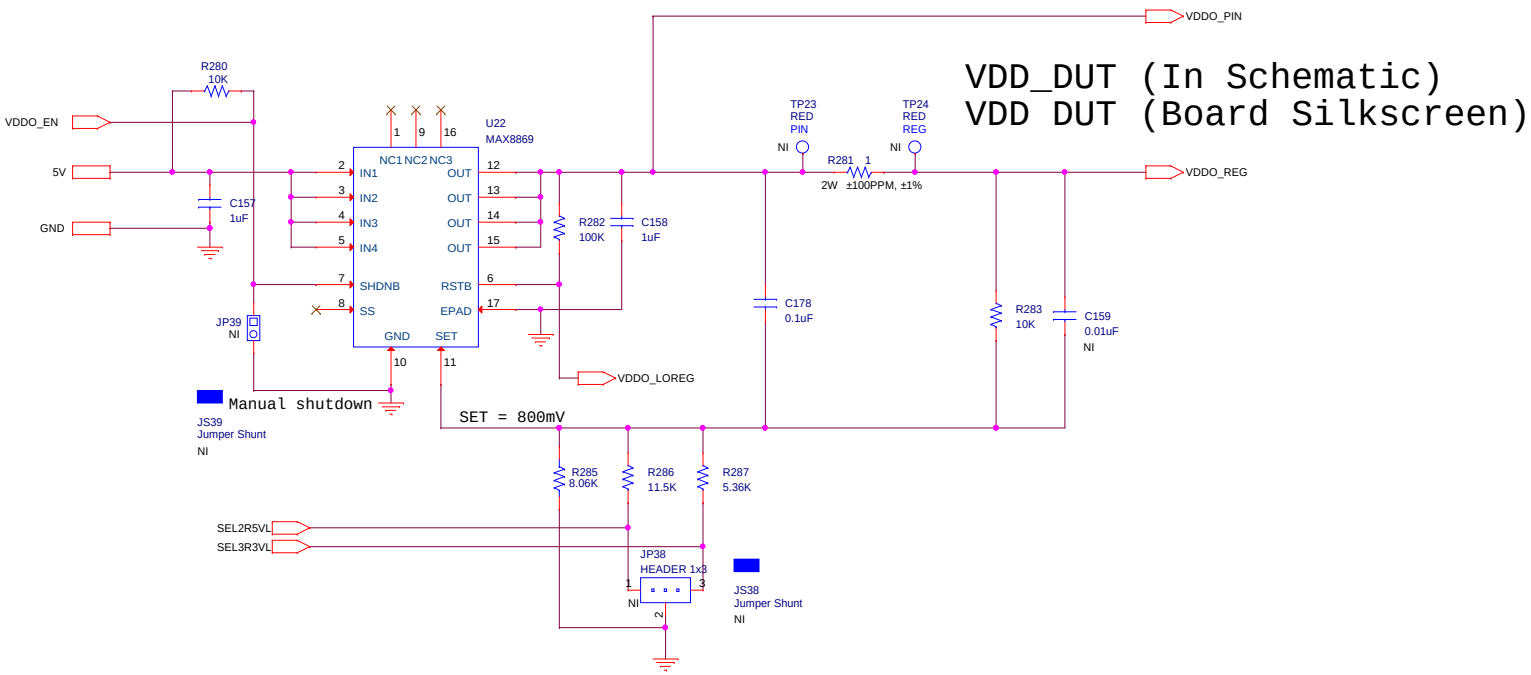

400 W Cesar Chavez
Austin, TX 78701

Title: VDD_REG_MAX8869

Size	Document Number	Rev
B	SI5381E-E-EB	1.1

Date: Tuesday, June 13, 2017 Sheet 43 of 44

VOLTAGE MEASUREMENT MULTIPLEXING

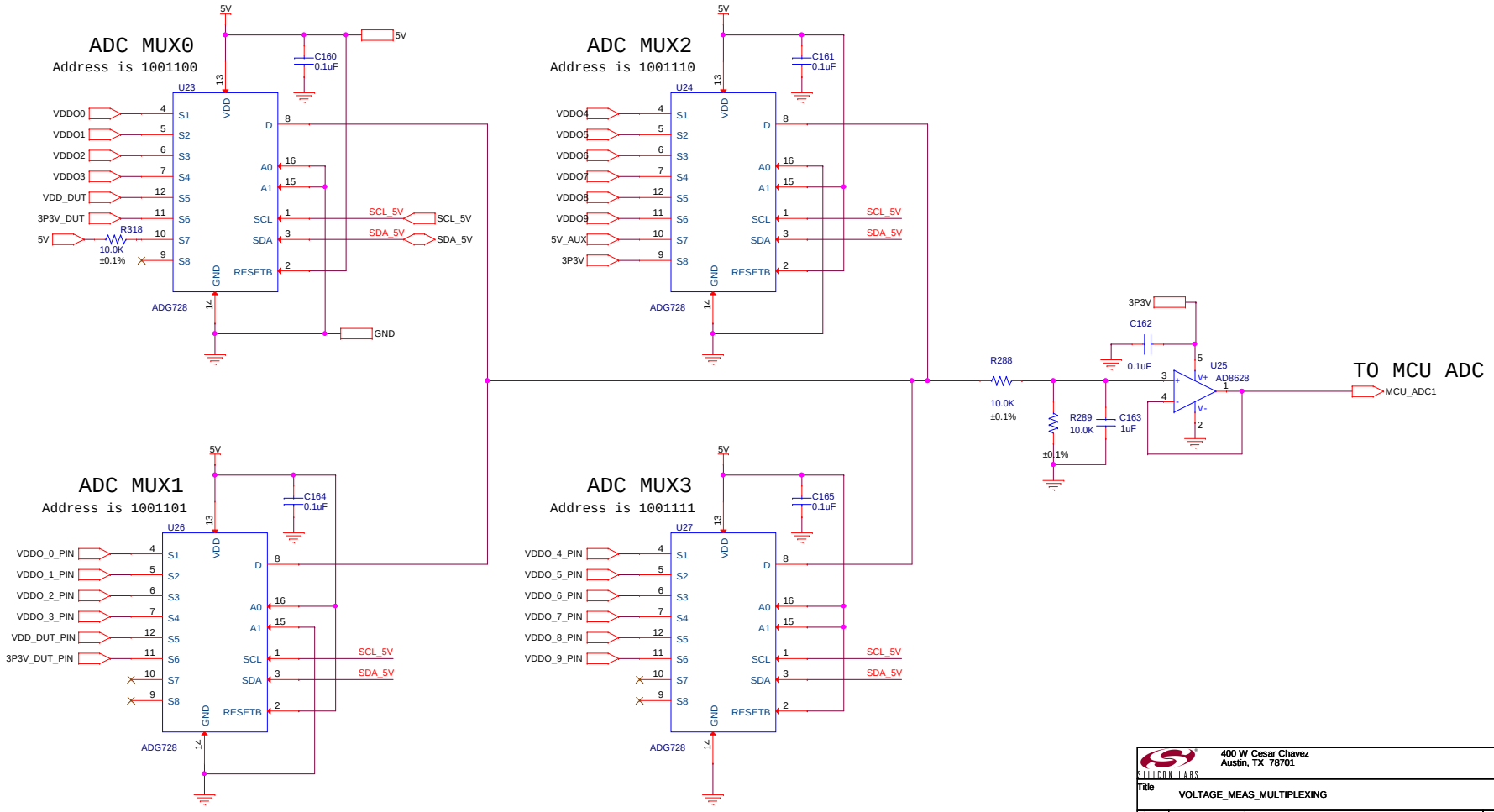

400 W Cesar Chavez
Austin, TX 78701

Title: VOLTAGE_MEAS_MULTIPLEXING

Size: B | Document Number: SI5381E-E-EB | Rev: 1.1

Date: Tuesday, June 13, 2017 | Sheet 44 of 44